Energy Supply Systems

SINGLE POLE INSULATED CONDUCTOR RAIL

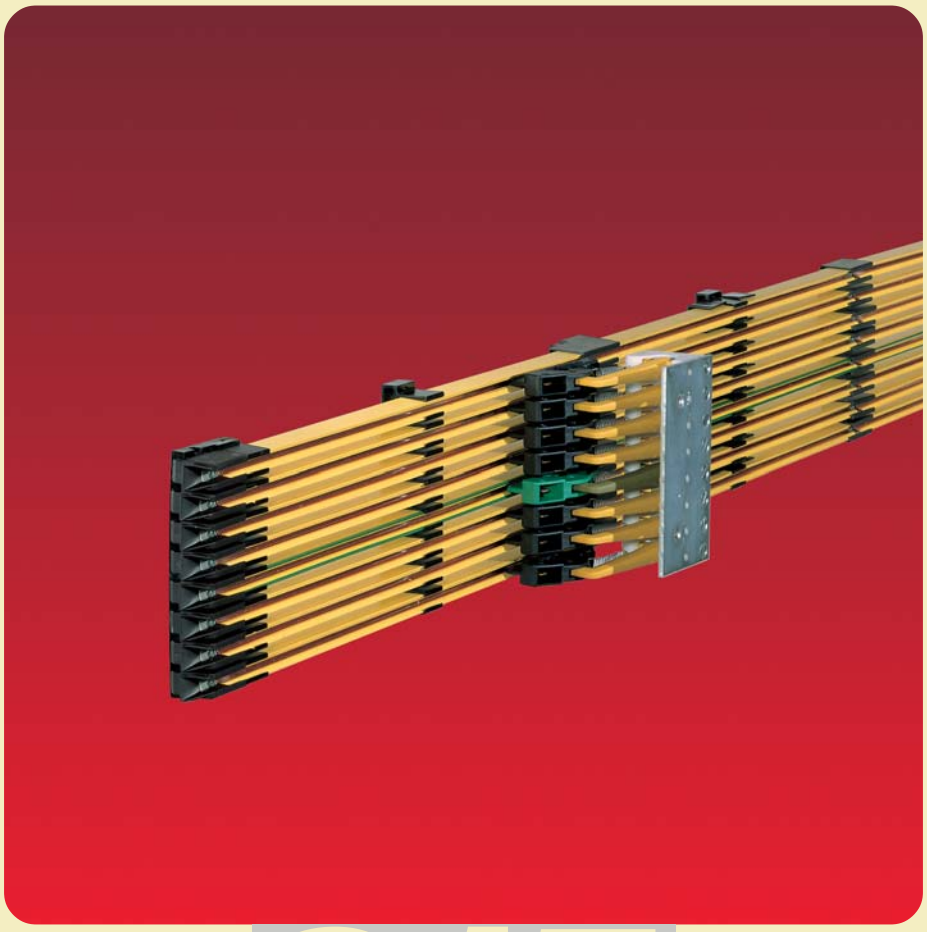

815

100 amps

wampfler

solutions for a moving world

KAT0815-0001c-E

Conductor rail system in a high bay storage

Slip ring with conductor rail system in a stretch-foil packing machine

Electric overhead monorail with conductor rail - trolley on the way to the high bay storage

Table of contents

Basic information

Conductor rails and accessories

Current collectors and accessories

Others

Description

Wampfler “single pole insulated conductor rail” programme 815

The Wampfler insulated conductor rail programme 815 is protected against direct contact and used for indoor installations in overhead mono rails and slip rings. With the rail spacing of 12 mm or 14 mm it is possible to install 12 poles max. on overhead mono rail size 180 and 16 poles max. on size 240. Simple and quick installation was a main design principle.

- 100 Amps
- protected against direct contact
- little space consumption
- installation vertical and horizontal
- simple and quick installation

CONDUCTOR RAILS
The conductor rails are available in copper (max. nominal current 100 Amps) and steel (max. nominal current 32 Amps) and have a plastic cover insulation. The standard lengths are 4000 and 6000 mm; intermediate lengths are available. The earth conductor insulation cover is marked with a green stripe on both sides over the total length.

CURVES
Horizontal and vertical curves can be bent in the factory or on site.

SUPPORT
The conductor rail sections are fitted into the hanger clamps which are constructed as a sliding support. The support spacing is max. 500 mm for straight installations and 400 mm for curved systems.
Depending on the type of plastic hanger clamps they can be screwed or clipped to special runway profiles.
An adaption to specific customer profiles is easy to manufacture.

RAIL CONNECTION
The single rail sections are connected by a plug-in or a screw connection. Access to the connectors is easy from the frontside of the conductor rail. Every rail joint is protected against contact by an insulation cover.

POWER FEED
The power feed is made by a power feed connector or a power feed end cap. The power feed connector can be installed instead of the rail connector at any point of the conductor rail system. The connection is made by crimp terminals with a cross section of 1,5 up to 10 mm². Furthermore it is possible to feed in at the end cap for transfer points or separating points. The connection is made by crimp terminals with a cross section of 1,5 up to 6 mm². The crimp terminals are include in the delivery.

END CAPS / END CAPS FOR TRANSFER POINTS
Long end caps for transfer points are used at switches to enable an easy and smooth traversing. These end caps accommodate a lateral misalignment of ± 3 mm in all directions.

END CAPS FOR SEPARATING POINTS and EXPANSION JOINTS
Short end caps can be used to produce air gap separating points or expansion joints. The expansion joints can accomodate an expansion of 8 - 40 mm during temperature change.

CURRENT COLLECTORS
The compact current collector unit is made of a few parts. Separate fully insulated collector arms are able to move in all directions. Current collectors are easily exchangeable due to the snap-in technique. The earth collector is marked green and is mounted in a leading or lagging position. The collector shoes can be checked without demounting and can easily be replaced. The current collectors can accomodate lateral and vertical misalignments of ±10 mm. They transmit a continuous current of max. 50 Amps. Single-head or double-head current collectors mounted on one collector arm are available. 6-, 8- and 10-pole type current collector units are in production. Please contact us for other number of poles.
The collector shoes are made from copper graphite or for long duration applications they are made from pure graphite.

COLLECTOR SHOE CONTROL UNIT
The wearing of the collector shoes will be checked every time the current collectors passes the unit.

INSTALLATION
For detailed informationen please refer our installation instruction (MV0815-0001E).

PROTECTION AGAINST DIRECT CONTACT
See hint on page 3!

Remark:
Should the rail connector, power feed, air gap separating point or expansion joint not rest on the track section, hanger clamps are to be positioned on both sides at max. spacing of 200 mm.

Technical data

Wampfler “single pole insulated conductor rail“ programme 815

Conductor rail		**Copper**
Type		**081516**
Nominal current at 100% duty cycle and 35°C	**[A]**	100
Cross section of conductor	**[mm²]**	25
Resistance at 35°C	**[Ω/m]**	0.000745
Impedance at 12 mm rail spacing	**[Ω/m]**	0.000747
Impedance at 14 mm rail spacing	**[Ω/m]**	0.000748
Nominal voltage	**[V]**	500
Support spacing max.	**[mm]**	500 in straight applications; 400/250 in horizontal/vertical curves
Rail length	**[mm]**	Standard 4000 and 6000; intermediate lengths are available
External dimensions	**[mm]**	9.6 x 15.2
		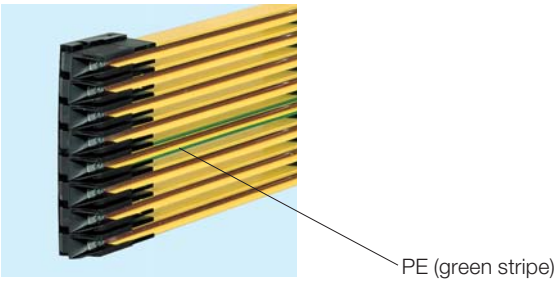
Ambient temperature max.		55°C
Ambient temperature min.		-30°C
Protection against direct contact		to VDE 0470 part 1 / EN 60 529 / IEC 529 and DIN 57 100 part 410 5.2.1 / 5.3 / VDE 0100 part 410 and DIN / VDE 0100 Teil 726 4 and EN 60 204 part 1
Protection type		IP 23
Dielectric strength		to VDE 0303 part 21 / IEC 243 22.4 kV/mm
Surface resistance		to DIN IEC 112 VDE 0303 T1 600 < CTI
Combustibility of insulation cover		to UL 94 V - 0
Air and surface creepage		depending on degree of pollution; surface creepage distance 30 mm to DIN VDE 0110 part 1 + 2
Chemical resistance of the profile at an ambient temperature of +45°C		Benzine resistant; Mineral oil resistant; Grease resistant; Sodium hydroxide 25% resistant; Hydrochlorid acid resistant; Sulphuric acid up to 50% resistant The materials of the conductor rail systems are weather resistant and have got a high resistance against certain chemicals. For special applications please contact us. Please be careful with solvents and contact sprays.

Note: Additional informations on request.

Conductor rails, Rail connectors

Insulated conductor rails

081516-...

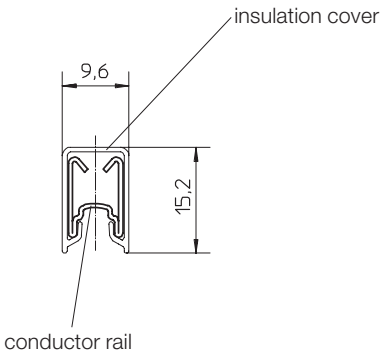

Type	Material	Order-Number Phase (PH)	Order-Number Earth (PE)	Length [m]	Weight [kg]
Conductor rail 100 Amps	Rail: Copper Insulation: PVC	081516-4x11	081516-4x12	4	1.092
Conductor rail 100 Amps	Rail: Copper Insulation: PVC	081516-6x11	081516-6x12	6	1.638

Rail connectors

081521

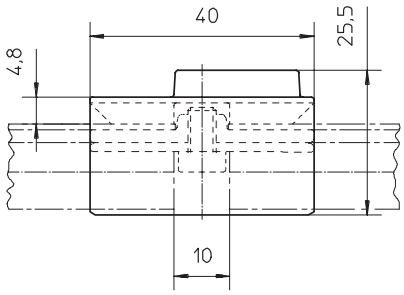

081526-...

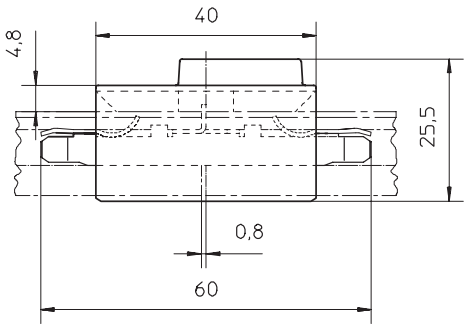

Rail connector 081526-...:

- to be used in straight applications only.
- if a connection with a plug-in connector is opened, the connector has to be replaced by a new one!

Type		Order-Number	For max. current [Amps]	Weight [kg]
Rail connector	**Screw type**	081521	100	0.016
	Plug-in type	081526-6	67	0.010

Please note also the mounting instruction MV0815-0001E!

Anchor cap, Power feeds

Anchor cap

081531

The anchor caps are mounted on both sides of a hanger clamp.
The hanger clamp must be bolted to the overhead runway beam!

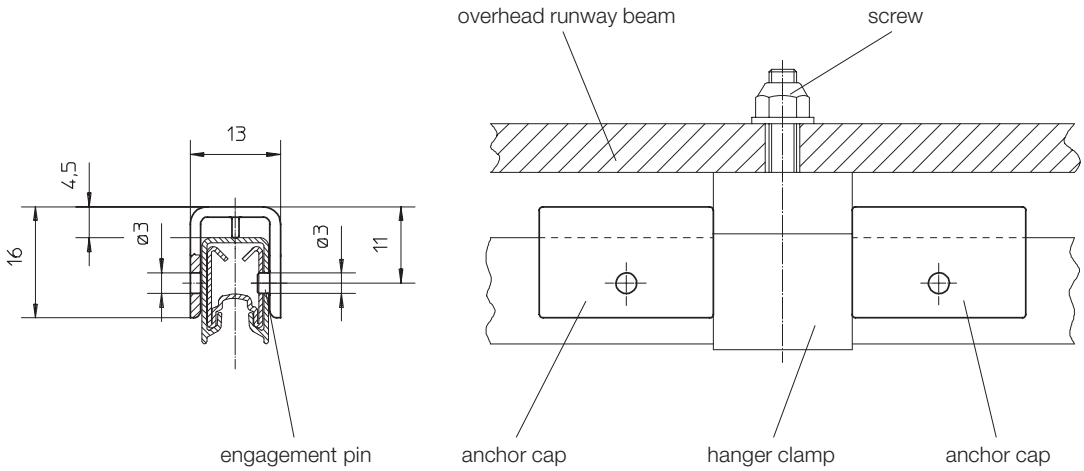

Type	Order-Number	Weight [kg]
Anchor cap	081531	0.002

Power feeds

081551-...

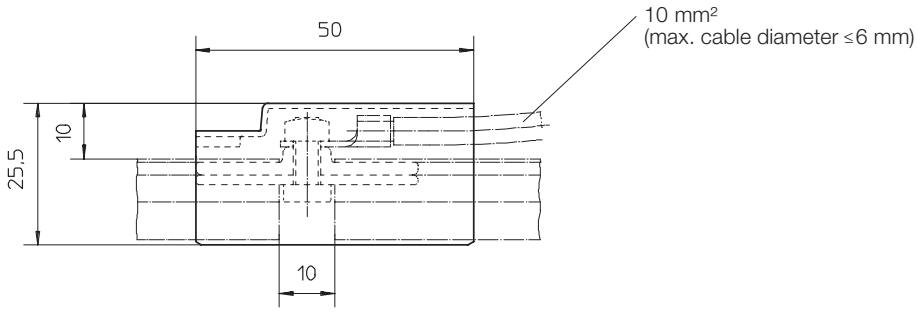

Type	Order-Number	Cross section [mm²]	Weight [kg]
Power feed	081551-1	1.5 - 2.5	0.016
	081551-2	4 - 6	0.016
	081551-3	5 - 10	0.016

Hanger clamps

Standard application screw type

Support spacing max.	for straight installations	for horizontal curves	for vertical curves
[mm]	500	400	250

Each following drawing shows a standard application.
Special hanger clamps designed for easy fixing onto mono rail profiles on request.
Please ask for a list of available special hanger clamps.

081543-... / 08-S280-...

14 mm rail spacing

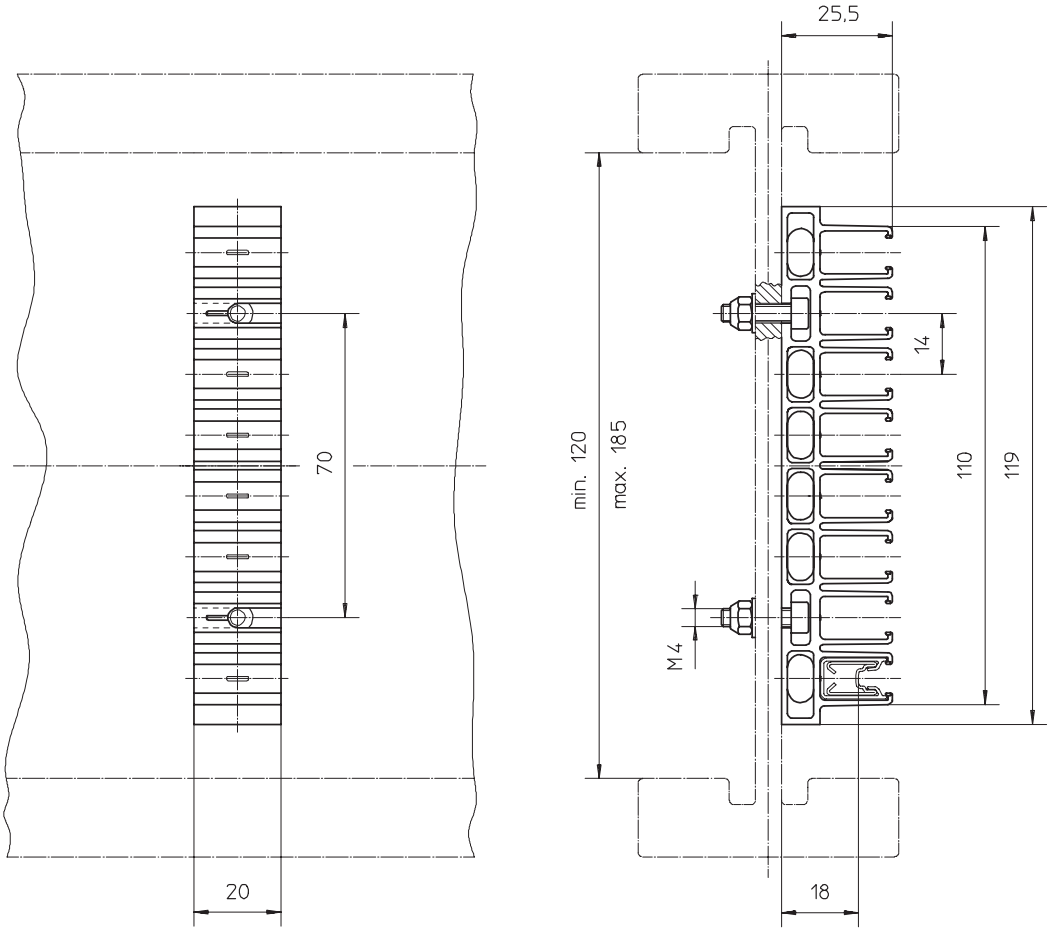

Shown is a 8-pole hanger clamp.

Type	Order-Number	Poles	Weight [kg]
Hanger clamp	08-S280-0198	4	0.009
	08-S280-0229	5	0.011
	08-S280-0305	6	0.013
	081543-08x14	8	0.025

Hanger clamps

Standard application screw type

081543-...

12 mm rail spacing

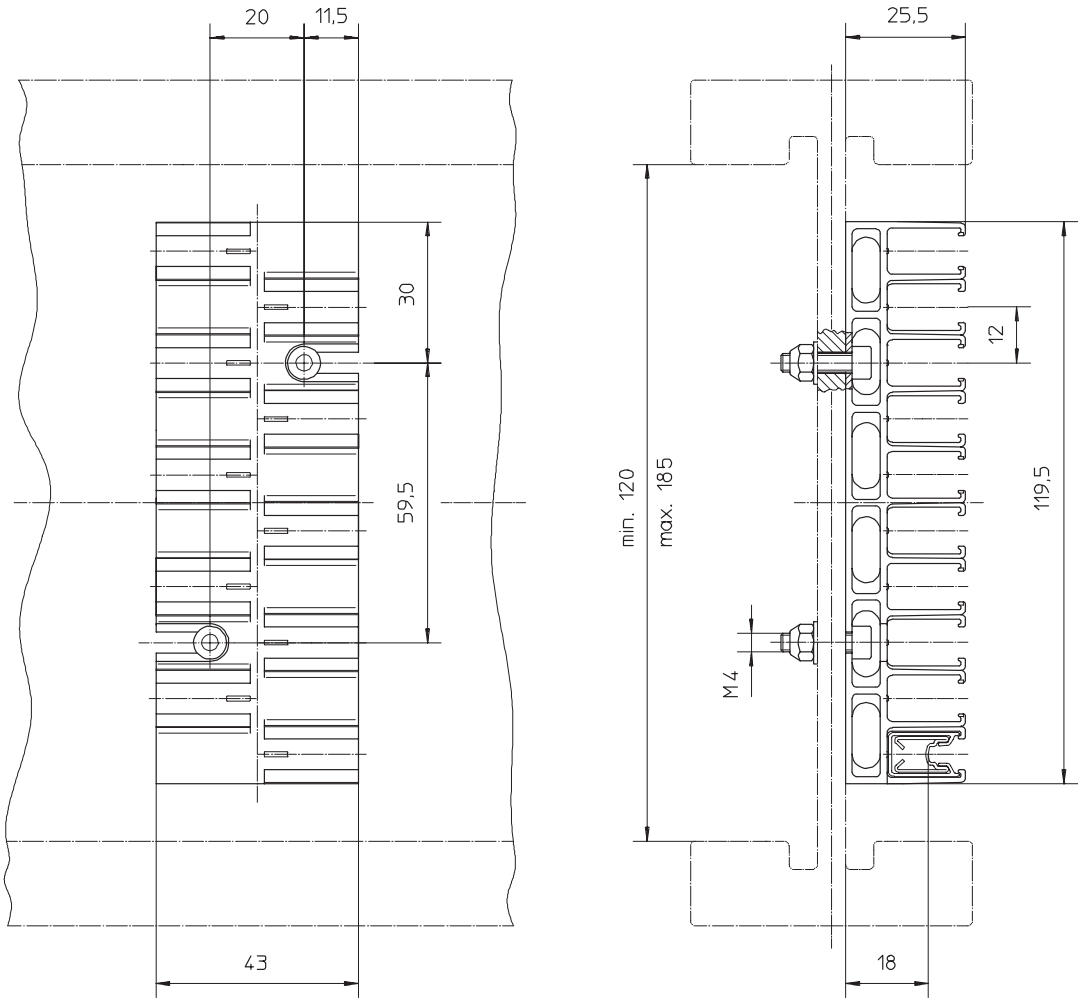

Shown is a 10-pole hanger clamp.

Type	Order-Number	Poles	Weight [kg]
Hanger clamp	081543-10x12	10	0.036

See following a list of press-in hanger clamps (for overhead runway beams).

Hanger clamps

Application examples

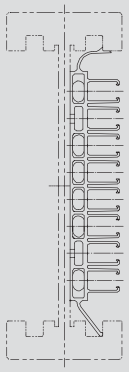

8-poles

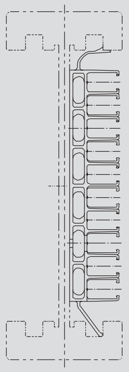

10-poles

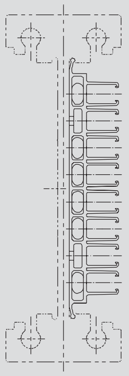

8-poles

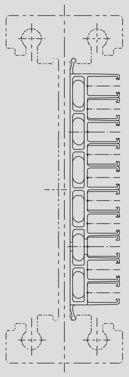

10-poles

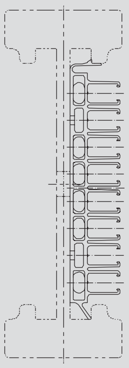

8-poles

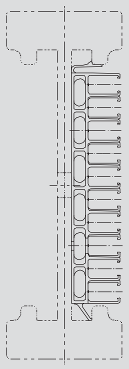

10-poles

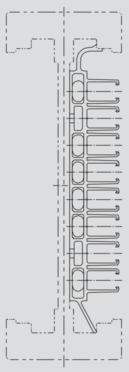

8-poles

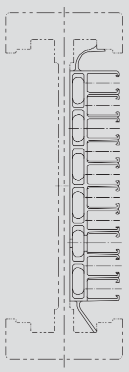

10-poles

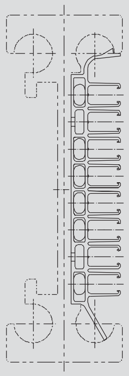

8-poles

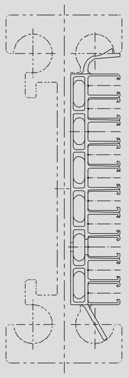

10-poles

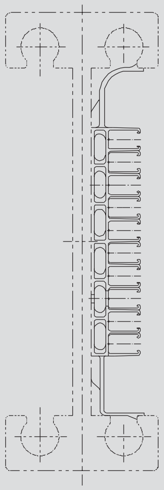

10-poles

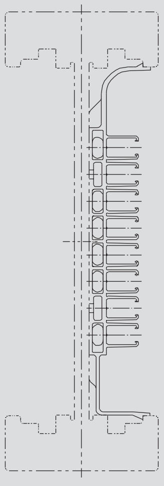

8-poles

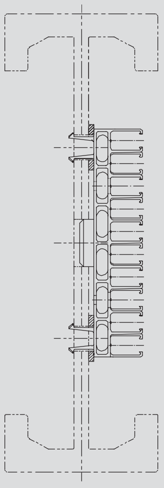

10-poles

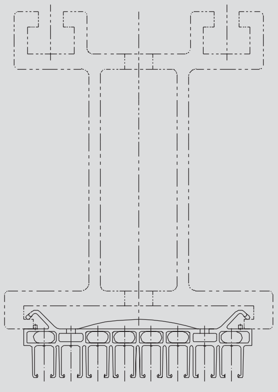

8-poles

End caps for transfer points/End caps, Air gap separating points

End caps for transfer points/End caps “long” and “short”

081574-... / 081576-... / 081577-...

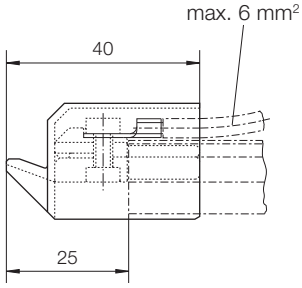

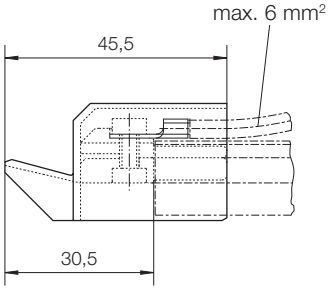

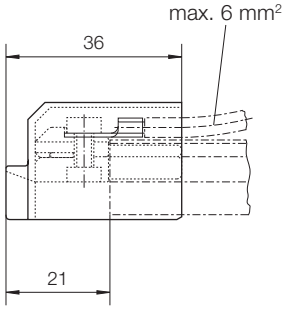

081574-... (End cap for transf. points)
- also used as end cap
- max. horizontal and vertical deflections: ± 3 mm

081576-... (End cap for transf. points)
- max. horizontal deflection: ± 3 mm
- max. vertical deflection: ± 5 mm

081577-... (End cap)
- is used for air gap separating points

Type	Order-Number	Cross section [mm²]	Weight [kg]
End cap for transfer points/end cap “long“ for 12 mm pole distance	081574-01x12x0	without power feed	0.016
	081574-01x12x2	1.5 - 2.5	0.018
	081574-01x12x6	4 - 6	0.018
End cap for transfer points/end cap “long“ for 14 mm pole distance	081574-01x14x0	without power feed	0.016
	081574-01x14x2	1.5 - 2.5	0.018
	081574-01x14x6	4 - 6	0.018
End cap for .../end cap “long“ for 14 mm pole distance and vertical deflection ±5 mm	081576-01x14x0	without power feed	0.016
	081576-01x14x2	1.5 - 2.5	0.018
	081576-01x14x6	4 - 6	0.018
End cap “short“ for 12 and 14 mm pole distance	081577-01x12x0	without power feed	0.016
	081577-01x12x2	1.5 - 2.5	0.018
	081577-01x12x6	4 - 6	0.018

Air gap separating points

081594-...

without expansion

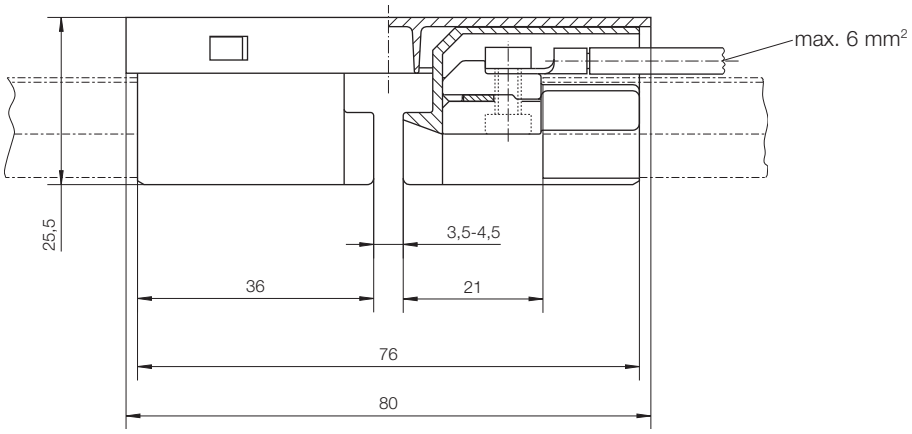

Type		Order-Number	Cross section [mm²]	Weight [kg]
Air gap separating point	without power feed	081594-1	-	0.035
	with power feed	081594-2	1.5 - 2.5	0.041
		081594-3	4 - 6	0.041

End cap sets - complete

for transfers (switches, lifters, etc.) / 6- and 8-poles / with and without power feed

081571-... / 081573-...

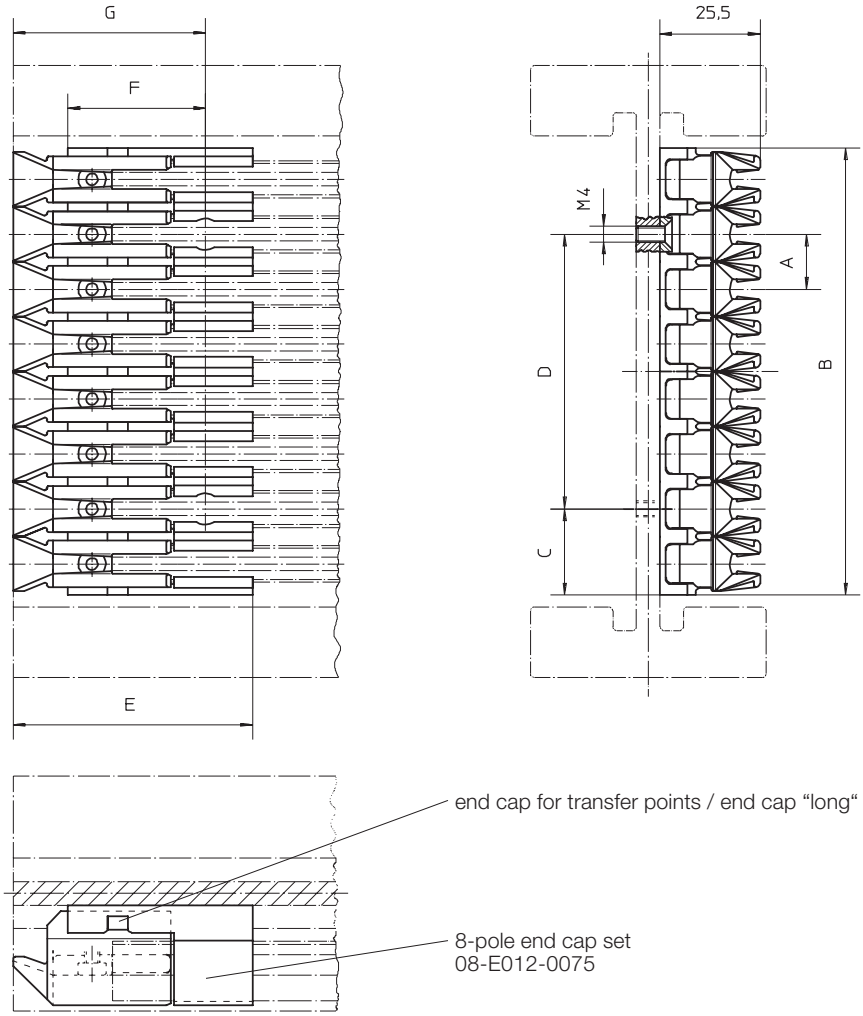

Shown is the 8-pole “end cap set - complete” without power feed.
8-pole “end cap set - complete” = end cap set + 8 pc. end caps for transfer points / end cap “long”.

This end cap set is screwed onto the overhead runway beam section.
The end caps of the individual conductor rail poles are clipped into it.

081573-... can only be used in connection with double current collectors. As an alternative to double current collectors you can use 2 single current collectors arranged one after the other, with a restricted vertical deflection of ± 4 mm.

Type	Order-Number	Poles	A [mm]	B [mm]	C [mm]	D [mm]	E [mm]	F [mm]	G [mm]	Weight [kg]	Cross section [mm²]
End cap set complete 6-pole	081571-06x14x0	6	14	114	22	70	61	35	49	0.140	1)
	081571-06x14x2									0.142	1.5 - 2.5
	081571-06x14x6									0.145	4 - 6
End cap set complete 8-pole	081571-08x14x0	8	14	114	22	70	61	35	49	0.172	1)
	081571-08x14x2									0.182	1.5 - 2.5
	081571-08x14x6									0.185	4 - 6
End cap set complete 6-pole 2)	081573-06x14x0	6	14	114	22	70	66,5	35	54,5	0.140	1)
	081573-06x14x2									0.142	1.5 - 2.5
	081573-06x14x6									0.145	4 - 6
End cap set complete 8-pole 2)	081573-08x14x0	8	14	114	22	70	66,5	35	54,5	0.172	1)
	081573-08x14x2									0.182	1.5 - 2.5
	081573-08x14x6									0.185	4 - 6

1) = without power feed *2) = lateral deflection ± 5 mm*

End cap sets - complete

for transfers (switches, lifters, etc.) / 10-poles / with and without power feed

081571-...

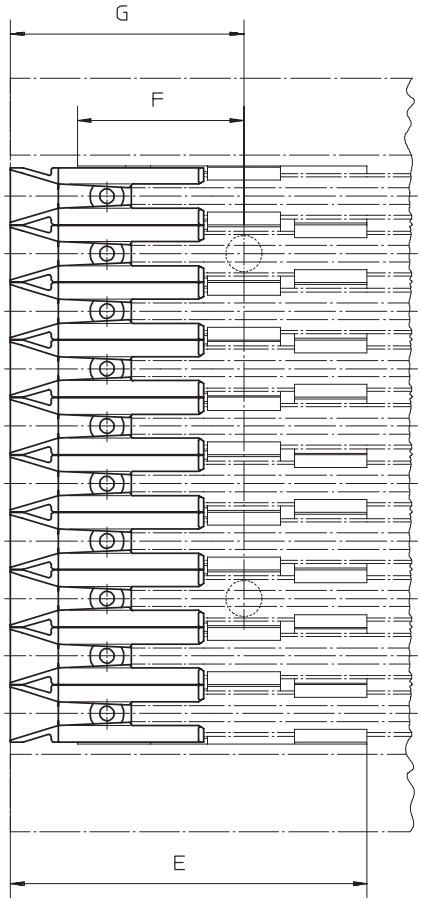

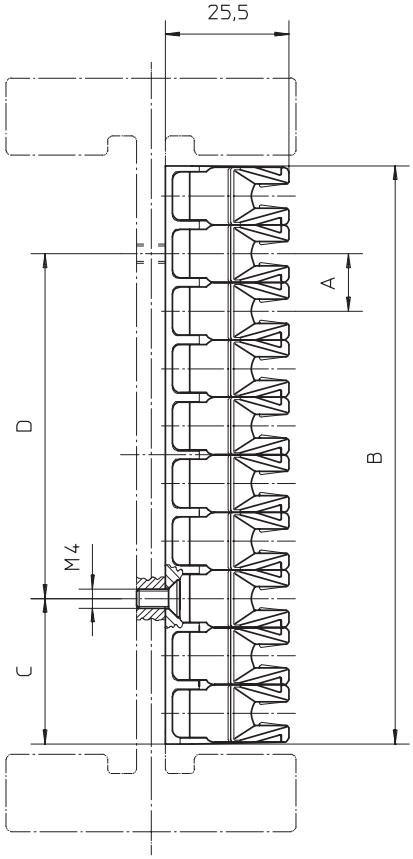

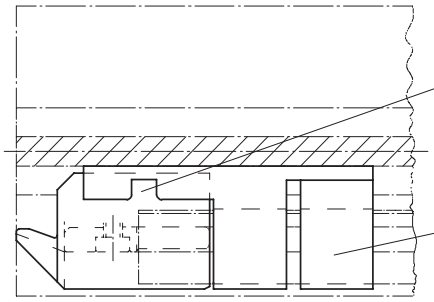

end cap for transfer points / end cap “long“

10-pole end cap set
08-E012-0151

Shown is the 10-pole “end cap set - complete” without power feed.
10-pole “end cap set - complete” = end cap set + 10 pc. end caps for transfer points / end cap “long”.

This end cap set is screwed onto the overhead runway beam section.
The end caps of the individual conductor rail poles are clipped into it.

Type	Order-Number	Poles	A [mm]	B [mm]	C [mm]	D [mm]	E [mm]	F [mm]	G [mm]	Weight [kg]	Cross section [mm²]
End cap set - complete	081571-06x12x0	6	12	74.5	8.7	47.6	74	34.5	48.5	0.140	1)
	081571-10x12x0	10	12	120	30.1	71.4	74	34.5	48.5	0.211	1)
	081571-10x12x2									0.218	1.5 - 2.5
	081571-10x12x6									0.223	4 - 6

1) = without power feed

Expansion joints

with 8 mm expansion

081561-...

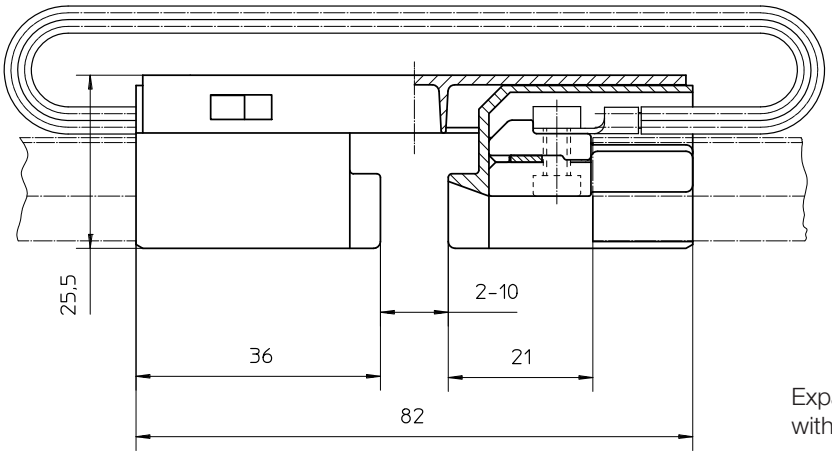

Expansion joints delivered
with bridge cables in different lengths.

Type	Order-Number	Expansion range [mm]	Cross section [mm²]	Number of expansion gaps	Weight [kg]
Expansion joint	081561-311	8	2 x 2.5	1	0.050

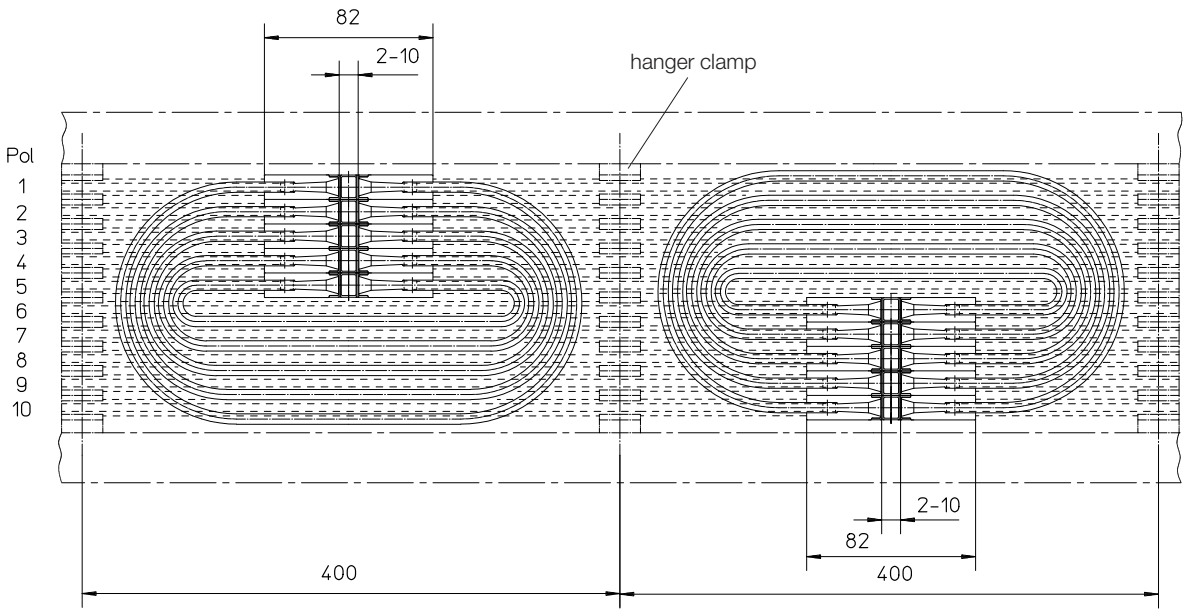

Shown is the 10-poles expansion joint.

Type	Order-Number	Expansion range [mm]	Cross section [mm²]	Poles	Number of expansion gaps
Expansion joint	081561-381	8	2 x 2.5	8	1
	081561-391	8	2 x 2.5	9	1
	081561-301	8	2 x 2.5	10	1

Expansion joints

with 8 mm expansion / number of expansion joints / air gap adjustment

Calculation of the number of expansion joints

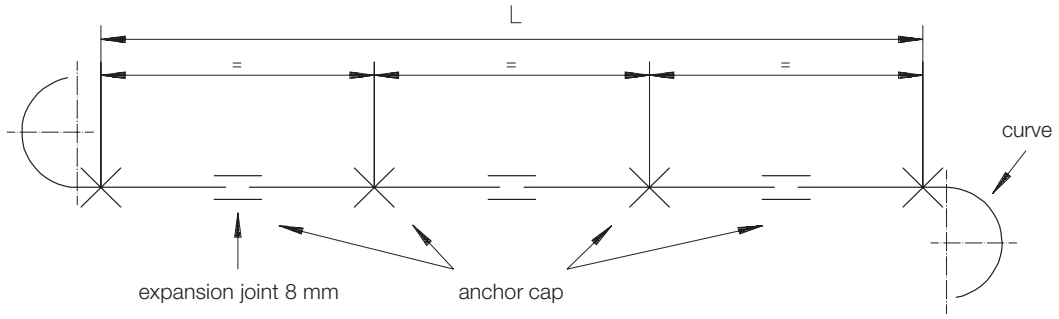

L = Length* [m]	Δt 10	Δt 20	Δt 30	Δt 40	Δt 50	Δt 60
10	-	-	1	1	2	2
20	-	1	2	2	3	3
30	1	2	2	3	4	4
40	1	2	3	4	5	6
50	2	3	4	5	6	7
60	2	3	4	6	7	8

Δt in °C

* = track length between end cap sets, curves (with 90° ... 180° curves and R ≤ 1000 mm the curves act as anchor points) or other components of the installation, which act as anchor points.

$\Delta t = \Delta t_a + \Delta t_{rail}$

Δt_a = temperature range of the ambient temperature
Δt_{rail} = temperature rise of the conductor rail
for 40% duty cycle Δt_{rail} = 10°C
for 65% duty cycle Δt_{rail} = 20°C
for 100% duty cycle Δt_{rail} = 30°C

Air gap adjustment of the expansion joints

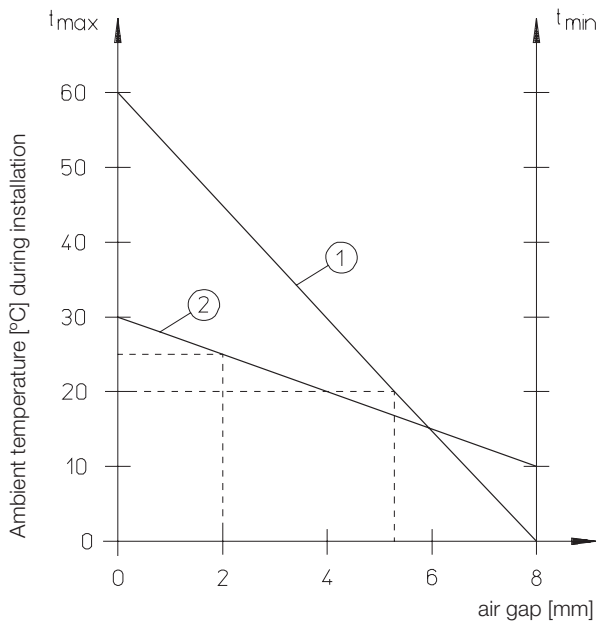

Instruction:

t_{min} = lowest temperature that occurs in the respective area of application
t_{max} = highest operational temperature that occurs in the respective area of application

1. Draw a connecting line from t_{min} to t_{max}
2. Mark the ambient temperature during operation horizontally
3. Draw a line from the intersection vertically down and read the air gap to be set

Examples:

① = Temperature range from 0°C to +60°C.
Ambient temp. during installation: + 20°C
Air gap: ca. 5 mm

② = Temperature range from +10°C bis +30°C.
Ambient temp. during installation: + 25°C
Air gap: ca. 2 mm

Expansion joints

with 20 mm or 40 mm expansion

081562-...

use with double current collector 081508-... / 081509-... only

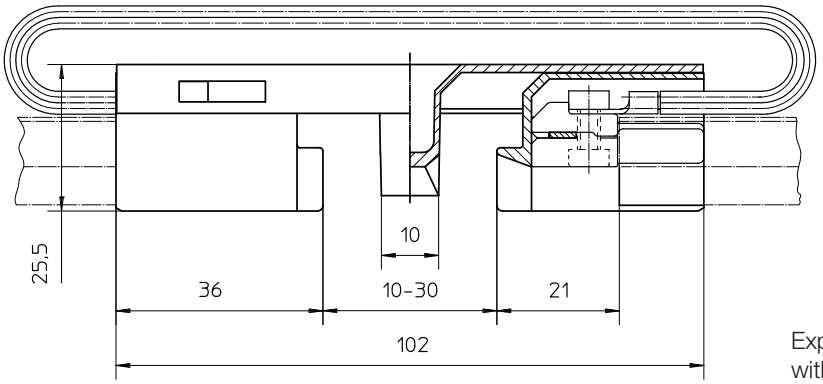

Expansion joints delivered
with bridge cables in different lengths.

Type	Order-Number	Expansion range [mm]	Cross section [mm²]	Number of expansion gaps	Weight [kg]
Expansion joint	081562-311	20	2 x 2.5	1	0.052

The expansion joint with 40 mm expansion range
consists of 2 sets of 20 mm expansion joints!

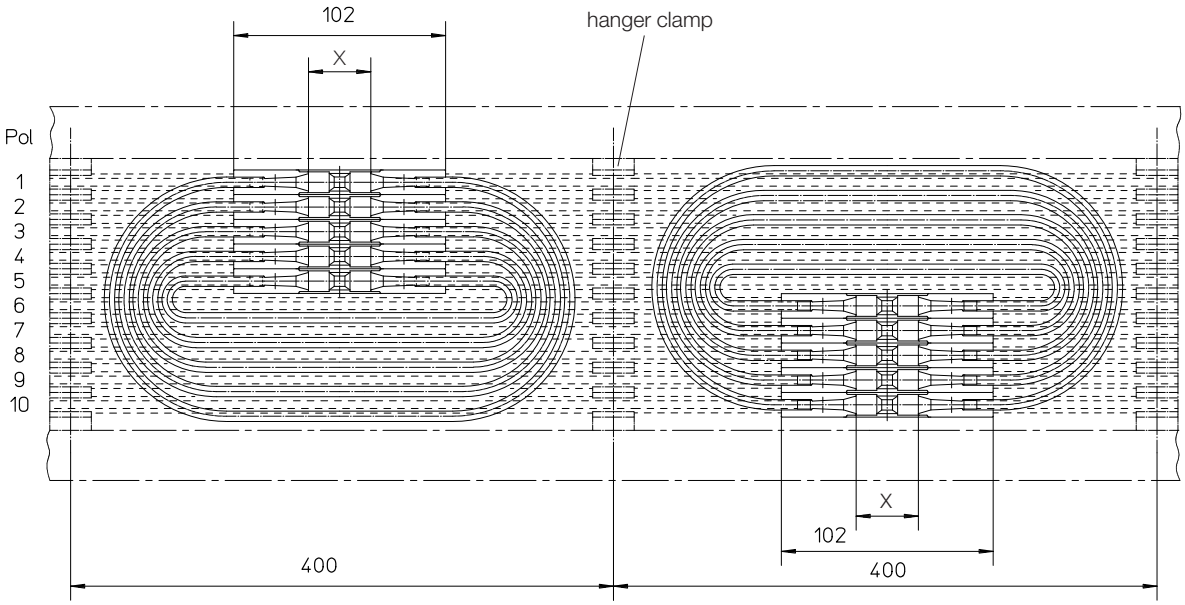

X = 10 - 30 mm
Shown is the 10-poles expansion joint with 20 mm expansion range.

Type	Order-Number	Expansion range [mm]	Cross section [mm²]	Poles	Number of expansion gaps
Expansion joint	081562-361	20	2 x 2.5	6	1
	081562-381	20	2 x 2.5	8	1
	081562-391	20	2 x 2.5	9	1
	081562-301	20	2 x 2.5	10	1
	081562-362	40	2 x 2.5	6	2
	081562-382	40	2 x 2.5	8	2
	081562-392	40	2 x 2.5	9	2
	081562-302	40	2 x 2.5	10	2

Expansion joints

with 20 mm or 40 mm expansion / number of expansion joints / air gap adjustment

Calculation of the number of expansion joints

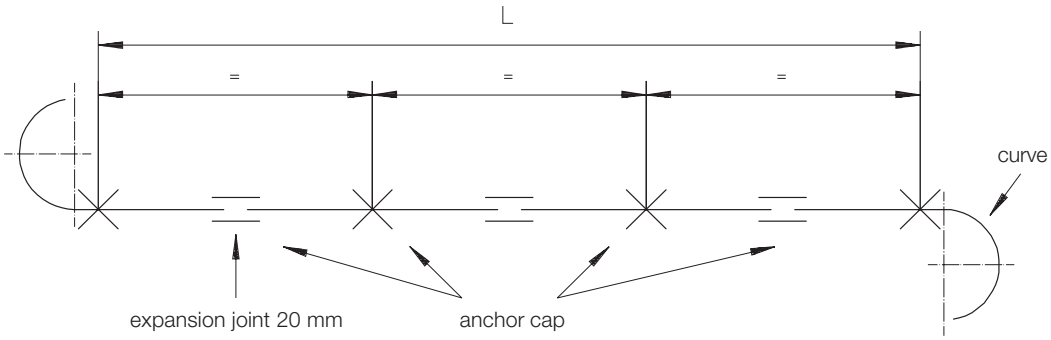

L = Length* [m]	Δt 10	Δt 20	Δt 30	Δt 40	Δt 50	Δt 60
10	-	-	1	1	1	1
20	-	1	1	1	1	1
30	1	1	1	1	2	2
40	1	1	1	2	2	3
50	1	1	2	2	3	3
60	1	1	2	3	3	4

Δt in °C

* = track length between end cap sets, curves (with 90° ... 180° curves and R ≤ 1000 mm the curves act as anchor points) or other components of the installation, which act as anchor points.

$\Delta t = \Delta t_a + \Delta t_{rail}$

Δt_a = temperature range of the ambient temperature
Δt_{rail} = temperature rise of the conductor rail
for 40% duty cycle Δt_{rail} = 10°C
for 65% duty cycle Δt_{rail} = 20°C
for 100% duty cycle Δt_{rail} = 30°C

Air gap adjustment of the expansion joints

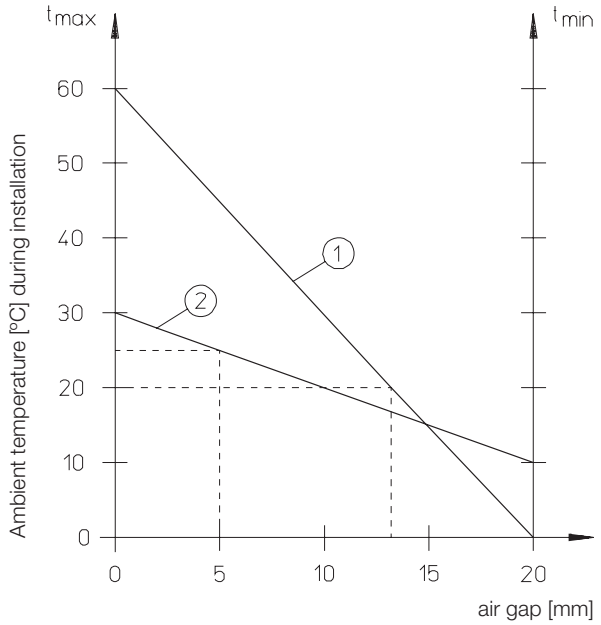

Instruction:

t_{min} = lowest temperature that occurs in the respective area of application
t_{max} = highest operational temperature that occurs in the respective area of application

1. Draw a connecting line from t_{min} to t_{max}
2. Mark the ambient temperature during operation horizontally
3. Draw a line from the intersection vertically down and read the air gap to be set

Examples:

① = Temperature range from 0°C to +60°C.
Ambient temp. during installation: + 20°C
Air gap: ca. 13 mm

② = Temperature range from +10°C bis +30°C.
Ambient temp. during installation: + 25°C
Air gap: ca. 5 mm

Current collectors

Installation hints

It must be ensured that the current collector central axis is mounted exactly onto the centre axis of the conductor rail and the specified installation distance between the arm axis and the sliding surface is strictly observed.
The connection cables must be highly flexible in order to guarantee complete freedom of functioning of the current collectors and they must be secured with a cable binder so that no tensile or torsional forces are transmitted onto the current collector head.
The table below indicates the colours of the current collector components for 8 and 10 pole current collectors, phase (PH) as well as protection earth (PE).

Poles	Rail spacing [mm]	Phase (PH)		Earth (PE)	
		Current collector arm	Collector shoe insul.	Current collector arm	Collector shoe insul.
8	14	Yellow	Black	Green	Green
10	12	Yellow	Grey	Green	Turquoise

Current collector units type 16 Amps with 63 mm shoe length

081506-...

with terrminal lug connection

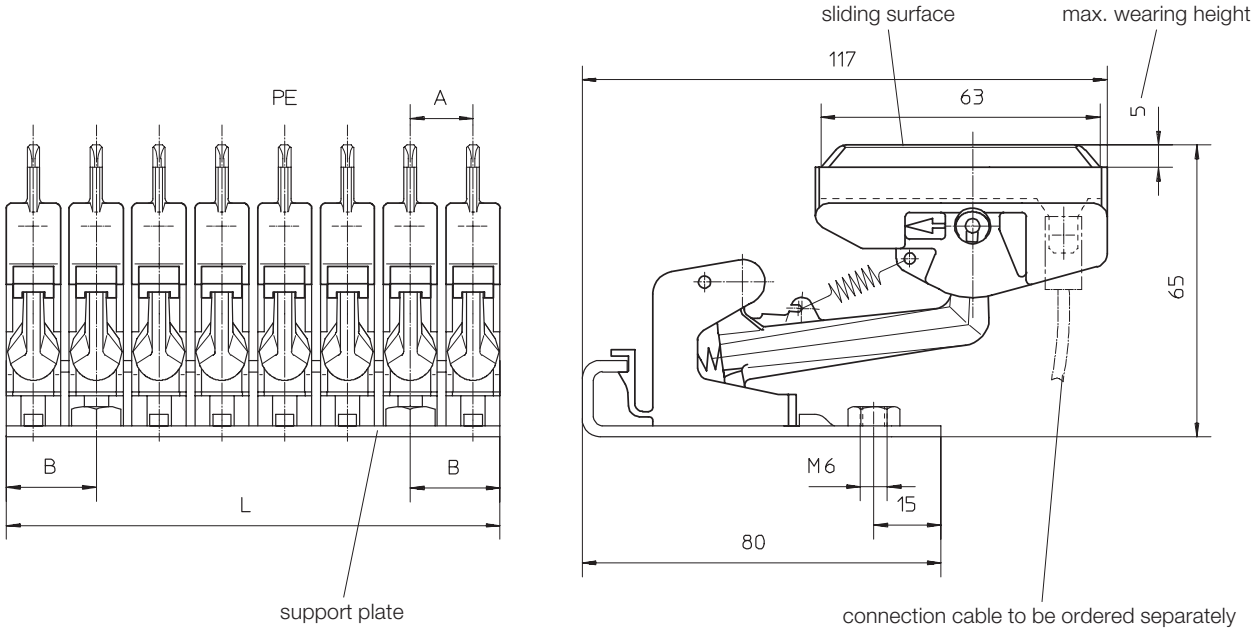

Collector shoe material: **pure graphite**

It must be guaranteed that the connection cables cannot exert any tension, pressure or torsion on the current collectors!

Visual difference of the current collector parts: see above table!

Movement horizontal: ±10 mm
vertical: ±10 mm

Contact pressure: 6 N

Type	A [mm]	B [mm]	L [mm]	Amps	Poles	Order-Number	Weight [kg]
Current collector unit with PE	14	6	54	16	4	081506-0443	0.195
	14	6	82	16	6	081506-0643	0.275
	14	20	110	16	8	081506-0843	0.370
	12	25	120	16	10	081506-1023	0.445
Current collector unit without PE	14	6	54	16	4	081506-0441	0.195

Current collectors (single pole) and support plates: see pages 20 and 21!

Current collectors

Current collector units type 35 Amps with 63 mm shoe length

081507-...

with terminal lug connection

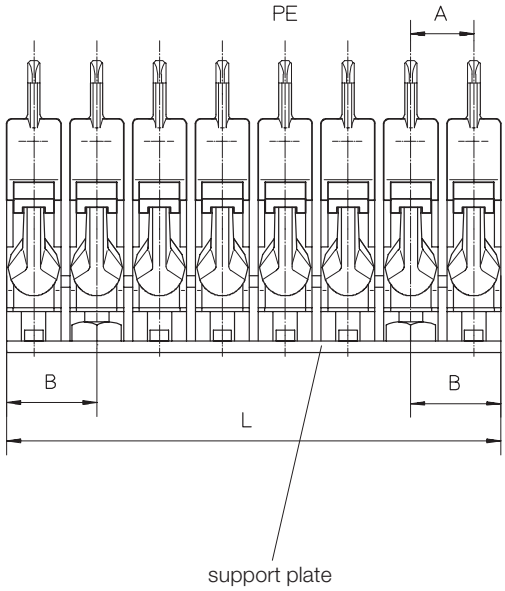

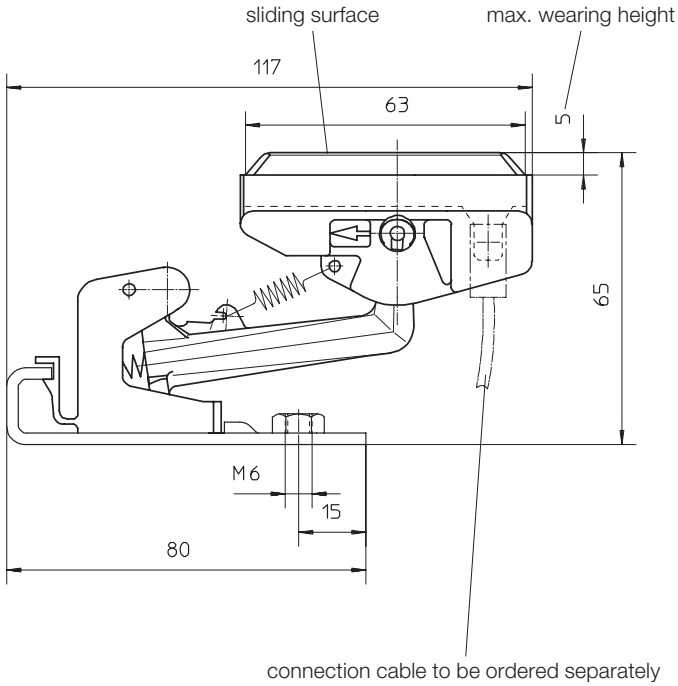

Collector shoe material: **copper graphite**

It must be guaranteed that the connection cables cannot exert any tension, pressure or torsion on the current collectors!

Visual difference of the current collector parts: see page 16!

Movement horizontal: ±10 mm
vertical: ±10 mm

Contact pressure: 6 N

Type	A [mm]	B [mm]	L [mm]	Amps	Poles	Order-Number	Weight [kg]
Current collector unit with PE	14	6	54	35	4	081507-0443	0.220
	14	6	82	35	6	081507-0643	0.310
	14	20	110	35	8	081507-0843	0.420
	12	25	120	35	10	081507-1023	0.505
Current collector unit without PE	14	6	54	35	4	081507-0441	0.220

Current collectors (single pole) and support plates: see page 21!

Current collectors

Double current collector units type 35 Amps with 2 x 50 mm shoe length

081508-...

with 2 terminal lug connections

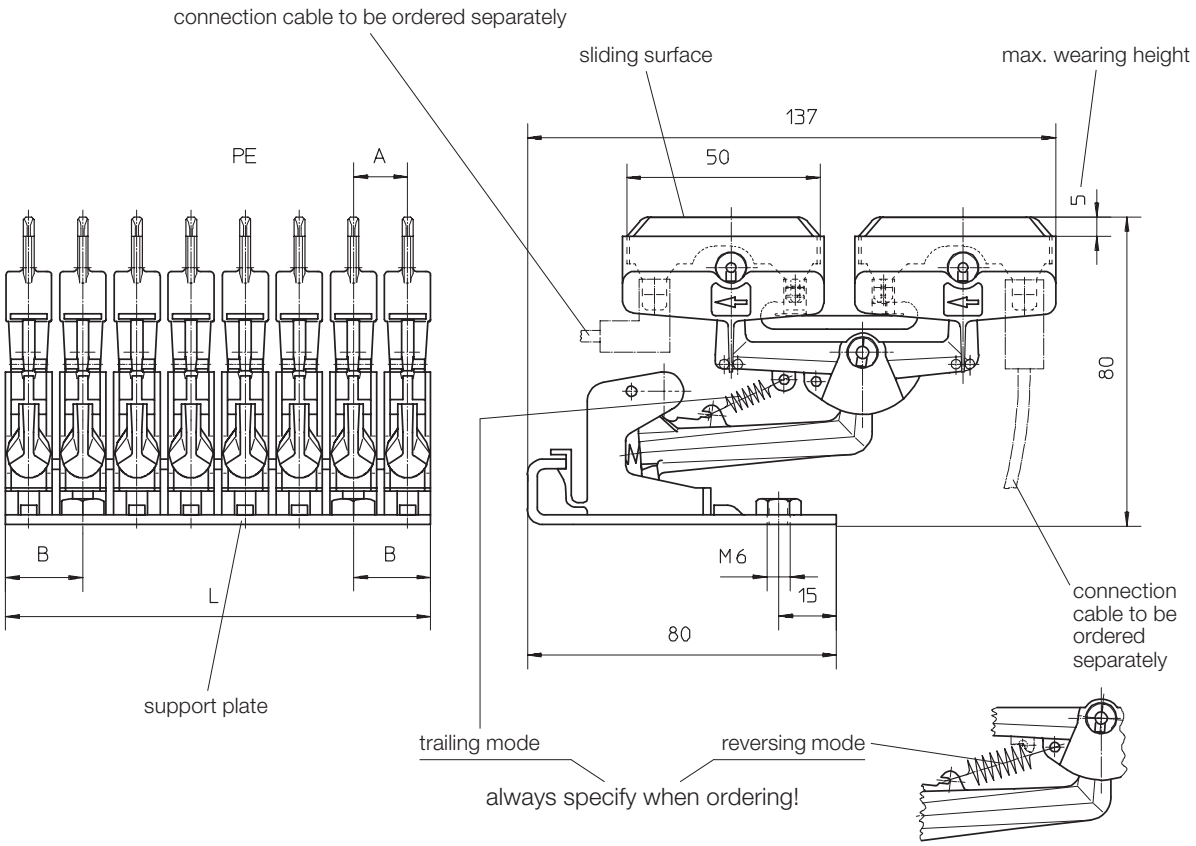

Collector shoe material: **pure graphite**

It must be guaranteed that the connection cables cannot exert any tension, pressure or torsion on the current collectors!

Visual difference of the current collector parts: see page 16!

Movement horizontal: ±10 mm
vertical: ±10 mm

Contact pressure: 6 N

Type	A [mm]	B [mm]	L [mm]	Amps	Poles	Order-Number Trailing-Mode	Order-Number Reversing-Mode	Weight [kg]
Double current collector unit with PE	14	6	82	35	6	081508-0643	081508-06435	0.380
	14	20	110	35	8	081508-0843	081508-08435	0.510
	12	25	120	35	10	081508-1023	081508-10235	0.580
Double current collector unit without PE	14	20	110	35	8	081508-0841	081508-08415	0.510

Current collectors (single pole) and support plates: see pages 20 and 21!

Current collectors

Double current collector units type 50 Amps with 2 x 50 mm shoe length

081509-...

with 2 terminal lug connections

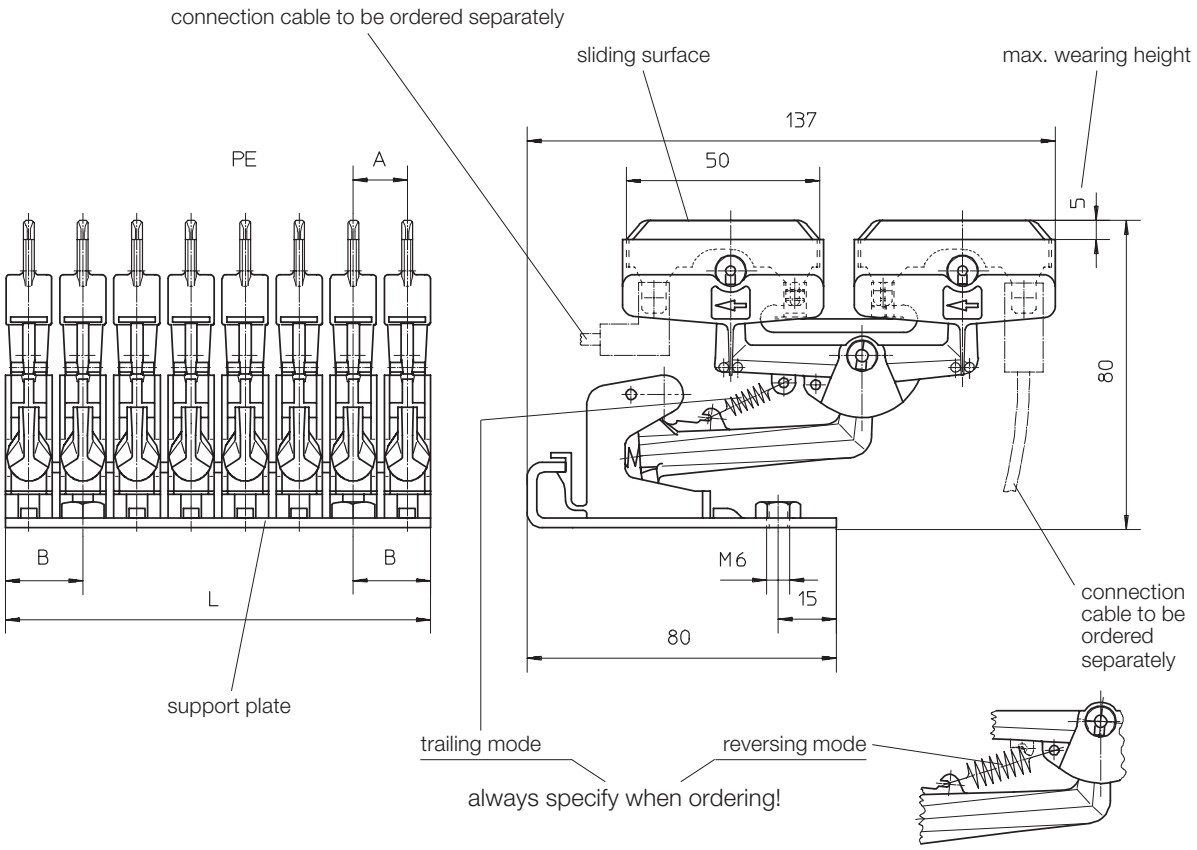

Collector shoe material: **copper graphite**

It must be guaranteed that the connection cables cannot exert any tension, pressure or torsion on the current collectors!

Visual difference of the current collector parts: see page 16!

Movement horizontal: ±10 mm
vertical: ±10 mm

Contact pressure: 6 N

Type	A [mm]	B [mm]	L [mm]	Amps	Poles	Order-Number Trailing-Mode	Order-Number Reversing-Mode	Weight [kg]
Double current collector with PE	12	6	72	50	6	-	081509-06235	0.410
	14	6	82	50	6	081509-0643	081509-06435	0.430
	14	20	110	50	8	081509-0843	081509-08435	0.575
	12	25	120	50	10	081509-1023	081509-10235	0.700
Double current collector without PE	14	20	110	50	8	081509-0841	081509-08415	0.575
	12	25	120	50	10	-	081509-10215	0.700

Current collectors (single pole) and support plates: see page 21!

Current collectors

Current collectors type 16 Amps with 63 mm shoe length

081506-...

single pole; with terminal lug connection

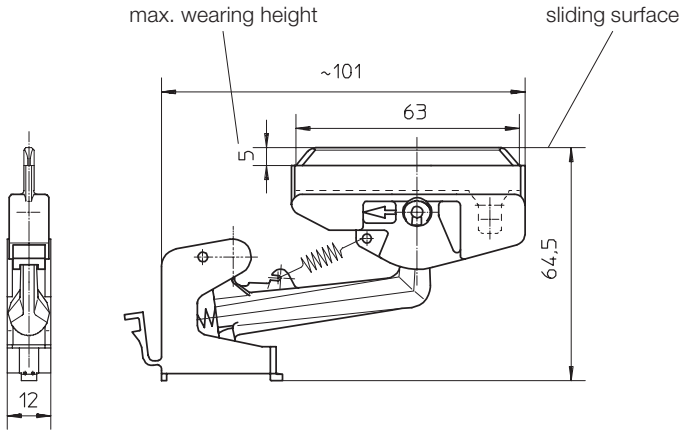

Collector shoe material: **pure graphite**

Type		Order-Number	for rail spacing [mm]	Weight [kg]
Current collector	**16 A, PH**	081506-0121	12	0.026
	16 A, PE	081506-0122	12	0.026
	16 A, PH	081506-0141	14	0.026
	16 A, PE	081506-0142	14	0.026

Visual difference of the current collector parts: see page 16!

Double current collectors type 35 Amps with 2 x 50 mm shoe length

081508-...

single pole; with 2 terminal lug connections

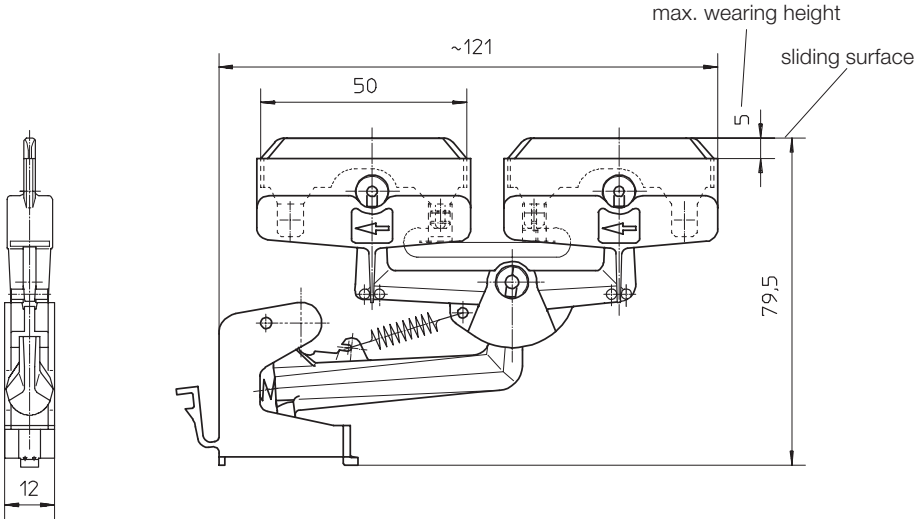

Collector shoe material: **pure graphite**

shown is “reversing mode“

Type		Order-Number Trailing-Mode	Order-Number Reversing-Mode	for rail spacing [mm]	Weight [kg]
Double current collector	**35 A, PH**	081508-0121	081508-01215	12	0.042
	35 A, PE	081508-0122	081508-01225	12	0.042
	35 A, PH	081508-0141	081508-01415	14	0.042
	35 A, PE	081508-0142	081508-01425	14	0.042

Visual difference of the current collector parts: see page 16!

Current collectors and accessories

Current collectors type 35 Amps with 63 mm shoe length

081507-...

single pole; with terminal lug connection

Collector shoe material: **copper graphite**

sketch see 081506-... (page 20)

Type		Order-Number	for rail spacing [mm]	Weight [kg]
Current collector	**35 A, PH**	081507-0121	12	0.032
	35 A, PE	081507-0122	12	0.032
	35 A, PH	081507-0141	14	0.032
	35 A, PE	081507-0142	14	0.032

Visual difference of the current collector parts: see page 16.

Double current collectors type 50 Amps with 2 x 50 mm shoe length

081509-...

single pole; with 2 terminal lug connections

Collector shoe material: **copper graphite**

sketch see 081508-... (page 20)

Type		Order-Number Trailing-Mode	Order-Number Reversing-Mode	for rail spacing [mm]	Weight [kg]
Double current collector	**50 A, PH**	081509-0121	081509-01215	12	0.050
	50 A, PE	081509-0122	081509-01225	12	0.050
	50 A, PH	081509-0141	081509-01415	14	0.050
	50 A, PE	081509-0142	081509-01425	14	0.050

Visual difference of the current collector parts: see page 16.

Support plates for current collectors

08-S138-...

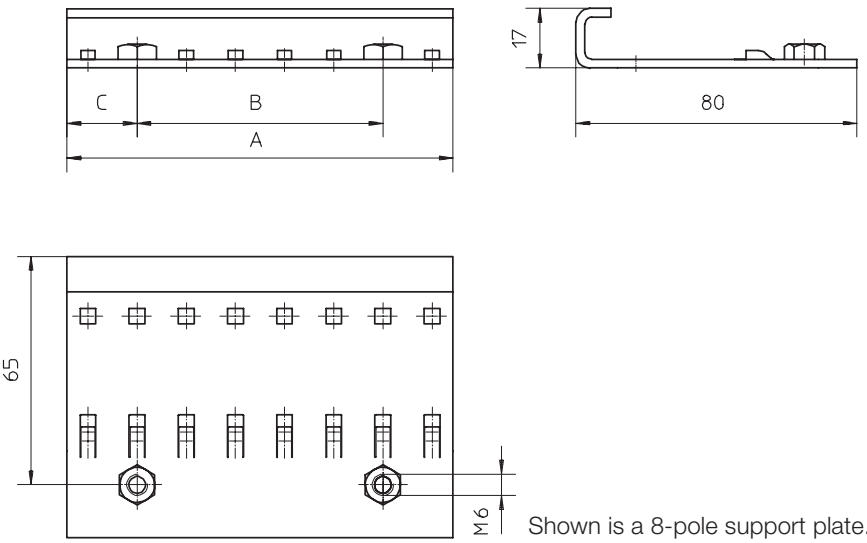

Shown is a 8-pole support plate.

Type	Order-Number	Poles	Rail spacing [mm]	A [mm	B [mm]	C [mm]	Weight [kg]
Support plate for current collector	08-S138-0056	4	14	54	42	6	0.103
	08-S138-0054	6	14	82	70	6	0.156
	08-S138-0052	8	14	110	70	20	0.208
	08-S138-0053	10	12	120	70	25	0.225

Connection cables

Completely with connection lug and shroud

Cables to DIN VDE 0298 part 4; Connector to DIN 46 257 part 3.

081109-...

The connection cables are highly flexible and for the phase conductor **double** / for the earth conductor **single** insulated.
To be ordered in the required length and size.
Connection cables: Phase = black
Earth = yellow/green

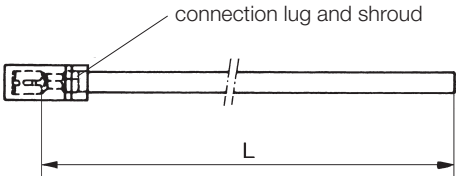

Cross section [mm²]	Order-Number Phase (PH)	Order-Number Earth (PE)	Length [m]	Cable diameter [mm]	Amps[1)]	Weight [kg/m]
1.5	081109-0.5x1.5x21	081109-0.5x1.5x42	0.5	4 / 3	24	0.023
1.5	081109-1 x1.5x21	081109-1 x1.5x42	1	4 / 3	24	0.023
2.5	081109-0.5x2.5x21	081109-0.5x2.5x42	0.5	5 / 3.5	32	0.037
2.5	081109-1 x2.5x21	081109-1 x2.5x42	1	5 / 3.5	32	0.037
4	081109-1 x4 x21	081109-1 x4 x42	1	6	54	0.059

1) Capacitance according to DIN VDE 0298T4 08/2005, table 11

Other length and size on request

081109-...

The connection cables are highly flexible and **single** insulated.
To be ordered in the required length and size.
Connection cables: Phase = black
Earth = yellow/green

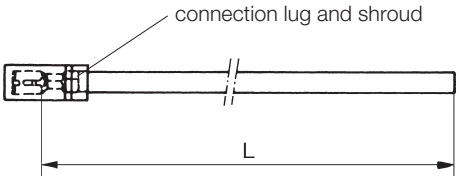

Cross section [mm²]	Order-Number Phase (PH)	Order-Number Earth (PE)	Length [m]	Cable diameter [mm]	Amps[1)]	Weight [kg/m]
1.5	081109-0.5x1.5x41	081109-0.5x1.5x42	0.5	3	24	0.016
1.5	081109-1 x1.5x41	081109-1 x1.5x42	1	3	24	0.016
2.5	081109-0.5x2.5x41	081109-0.5x2.5x42	0.5	3.5	32	0.034
2.5	081109-1 x2.5x41	081109-1 x2.5x42	1	3.5	32	0.034

1) Capacitance according to DIN VDE 0298T4 08/2005, table 11

Other length and size on request

081509-...

The connection cables are highly flexible and **single** insulated.
To be ordered in the required length and size.
Connection cables: Phase = black
Earth = yellow/green

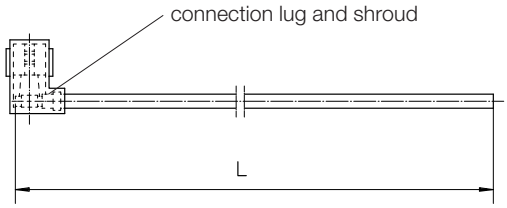

Cross section [mm²]	Order-Number Phase (PH)	Order-Number Earth (PE)	Length [m]	Cable diameter [mm]	Amps[1)]	Weight [kg/m]
1.5	081509-0.5x1.5x41	081509-0.5x1.5x42	0.5	3	24	0.016
1.5	081509-1 x1.5x41	081509-1 x1.5x42	1	3	24	0.016
2.5	081509-0.5x2.5x41	081509-0.5x2.5x42	0.5	3.5	32	0.034
2.5	081509-1 x2.5x41	081509-1 x2.5x42	1	3.5	32	0.034

1) Capacitance according to DIN VDE 0298T4 08/2005, table 11

Other length and size on request

Collector shoe control units

Up to 10-poles

08-P102-...

The collector shoe control unit is installed in the overhead monorail to ensure that worn collector shoes and missing current collectors are automatically detected by an electrical signal.
Testing is performed using a contactless circuit with a plastic-sheathed solenoid switch mounted in a plastic housing. During operation each shoe passed triggers a pulse. When the wear limit is reached, the operating distance to the initiator is too large and pulses can no longer be emitted.
The unit is supplied completely assembled and is considered for use in straight track sections.

Order number code: 0 8 0 5 5 1 - 1 0 x 0 8 x 1 2

- Poles
- Runway beam-width "E"
- Rail spacing (2 = 12 mm; 4 = 14 mm)
- Collector shoe material (1 = pure graphite; 3 = copper graphite)

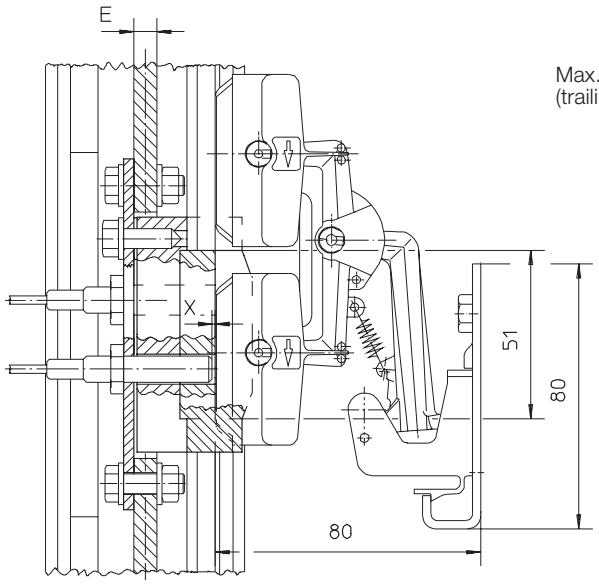

Max. speed 60 m/min (trailing mode)

Details on cut-outs and holes in runway beam profile please take from MV0815-0001E.

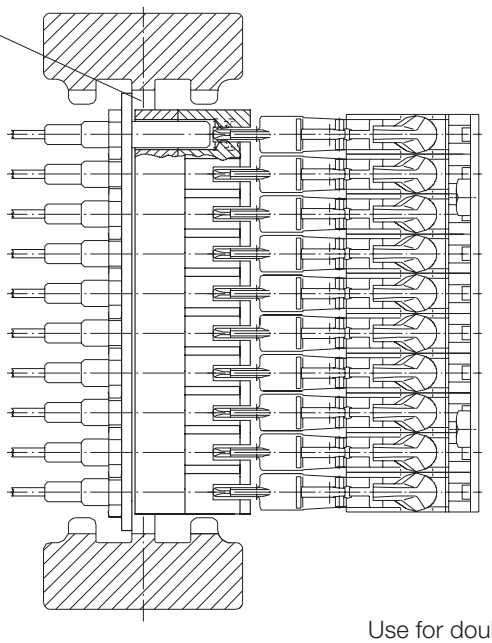

x = 1.0 mm for copper graphite;
0.5 mm for pure graphite;
is adjusted in the factory.

Use for double current collectors only!

Spare parts

Collector shoes

The collector shoes are replaced as following:

a) Single current collector

1. Remove the stabilizing spring (no overstreching!)
2. Disconnect the connection cable
3. Pull the collector head over the lock point
4. Mount the new collector head in reverse order

b) Double Current collector

1. Remove the stabilizing spring (no overstreching!)
2. Disconnect the connection cable
3. Disconnect the pair of collector shoes
4. Mount the new pair of collector shoes in reverse order

Collector shoes (pure graphite), 16 Amps and 35 Amps

081006-...

Visual difference of the collector shoe insulations: see page 16!

- 63 mm shoe length; max. 16 Amps
- Collector shoe material: **pure graphite**

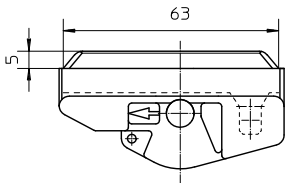

Type			Order-Number	for rail spacing [mm]	Weight [kg]
Collector shoe "long type"	16 A	PH	081006-122	12	0.012
	16 A	PE	081006-222	12	0.012
	16 A	PH	081006-124	14	0.012
	16 A	PE	081006-224	14	0.012

- 2 x 50 mm shoe length; max. 35 Amps
- Collector shoe material: **pure graphite**

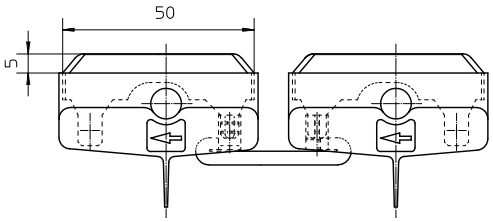

Type			Order-Number	for rail spacing [mm]	Weight [kg]
Pair of collector shoes "short type"	35 A	PH	081006-112	12	0.022
	35 A	PE	081006-212	12	0.022
	35 A	PH	081006-114	14	0.022
	35 A	PE	081006-214	14	0.022

Collector shoes (copper graphite), 35 Amps and 50 Amps

081006-...

Visual difference of the collector shoe insulations: see page 16!

- 63 mm shoe length; max. 35 Amps
- Collector shoe material: **copper graphite**

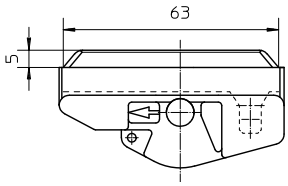

Type			Order-Number	for rail spacing [mm]	Weight [kg]
Collector shoe "long type"	35 A	PH	081006-142	12	0.018
	35 A	PE	081006-242	12	0.018
	35 A	PH	081006-144	14	0.018
	35 A	PE	081006-244	14	0.018

- 2 x 50 mm shoe length; max. 50 Amps
- Collector shoe material: **copper graphite**

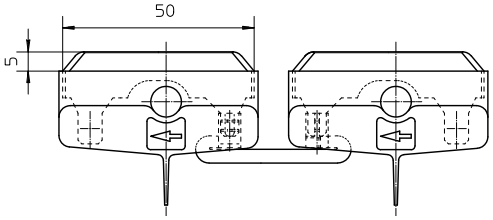

Type			Order-Number	for rail spacing [mm]	Weight [kg]
Pair of collector shoes "short type"	50 A	PH	081006-132	12	0.030
	50 A	PE	081006-232	12	0.030
	50 A	PH	081006-134	14	0.030
	50 A	PE	081006-234	14	0.030

Spare parts / Accessories

Stabilizing spring for current collector head

RZ-... / Z-...

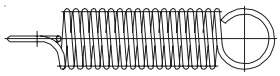

Type	for current collector	Carbon length [mm]	Mode	Order-Number
Stabilizing spring	081506-... 081507-...	63	Trailing Reversing	RZ-037I
	081508-... 081509-...	50	Trailing	Z-066RI
			Reversing	Z-073I

Accessories

Terminal lug for 1.5 mm² to 4 mm²
- for collector head connection

Type	Order-Number
Terminal lug 1.5 ... 2.5 mm²	08-160256-2
Terminal lug 2.5 ... 4 mm²	45047 123.211

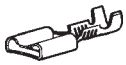

Insulation shroud for max. ø 6 mm
- for use with terminal lug

Type	Order-Number
Insulation shroud for max. ø 6 mm	08-925068-0

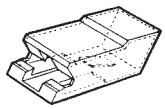

Terminal lug for 1 mm² to 2.5 mm²
- for collector head connection

Type	Order-Number
Terminal lug 90° 1 ... 2.5 mm²	08-180429-2

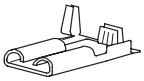

Insulation shroud for max. ø 3.5 mm
- for use with terminal lug

Type	Order-Number
Insulation shroud 90° for max. ø 3.5 mm	08-180984-0

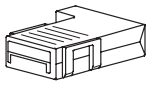

Crimp terminal for 1.5 mm² to 2.5 mm²
- for power feed and transfer point end cap

Type	Order-Number
Crimp terminal 1.5 ... 2.5 mm²	08-1630/4

Crimp terminal for 4 mm² to 6 mm²
- for power feed and transfer point end cap

Type	Order-Number
Crimp terminal 4 ... 6 mm²	08-1650/4

Bending device

081091

The conductor rails can be bent with the insulation cover fitted using the three-roller bending device 081091. Any vertical curve can be produced with a bending radius of 450 mm to ∞ and any horizontal curve of 1200 mm to ∞ on site using the adjusting spindle.
In order to avoid undesirable deformation of the conductor rail, the plastic insert provided must be introduced beforehand into the contact surface slot for producing horizontal curves and removed again after the bending process. It is possible to produce curves with straight sections from one piece without additional connectors.
Electrically operated bending machines are available on request for extensive installation work.

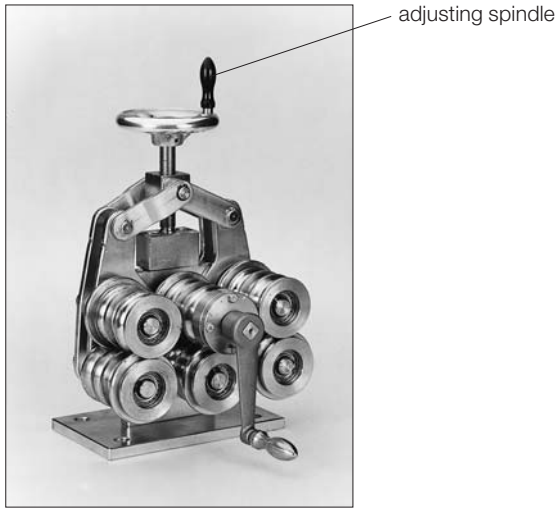

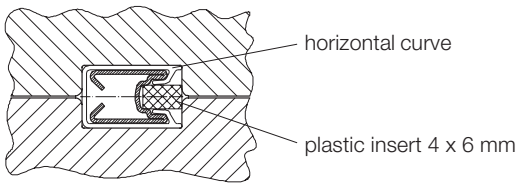

Type	Order-Number	Weight [kg]
Bending device	081091	17.5

See also MV0815-0001E

Disassembly tool

081092

The disassembly tool is required to dismantle the conductor rails secured in hanger clamps and end cap sets.

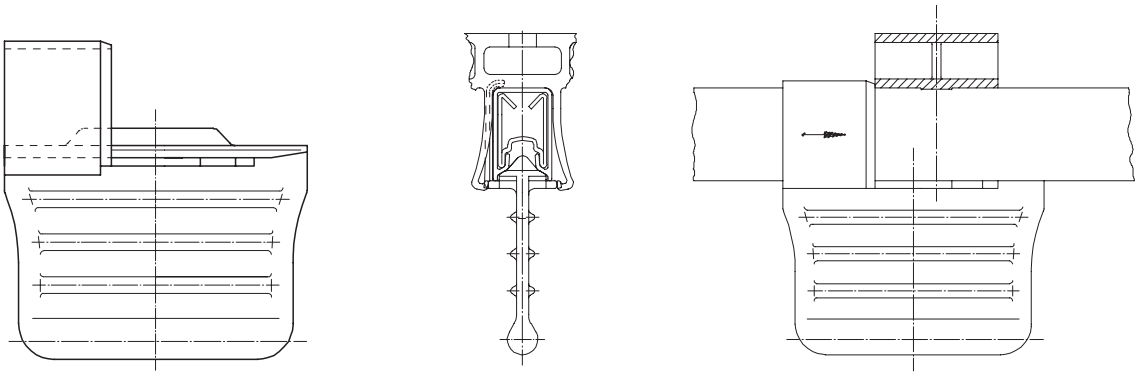

Disassembly tool in use

Type	Order-Number	Weight [kg]
Disassembly tool	081092	0.006

See also MV0815-0001E

Curves

Standard curves and belonging support spacings

Vertical arrangement

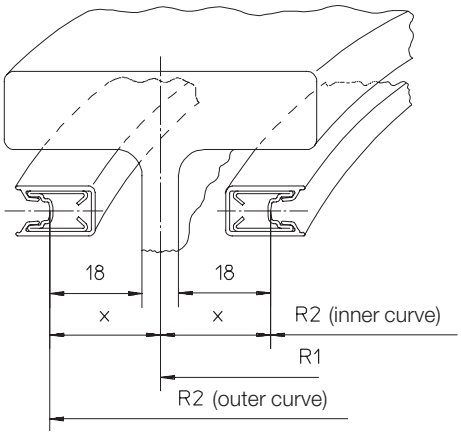

Horizontal arrangement

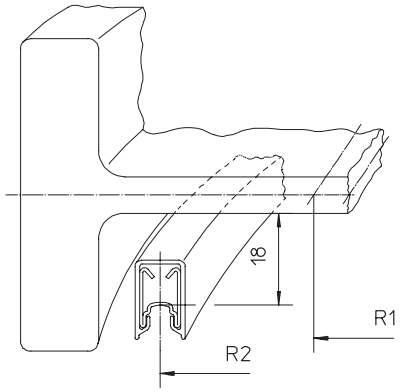

Outer curve

Inner curve

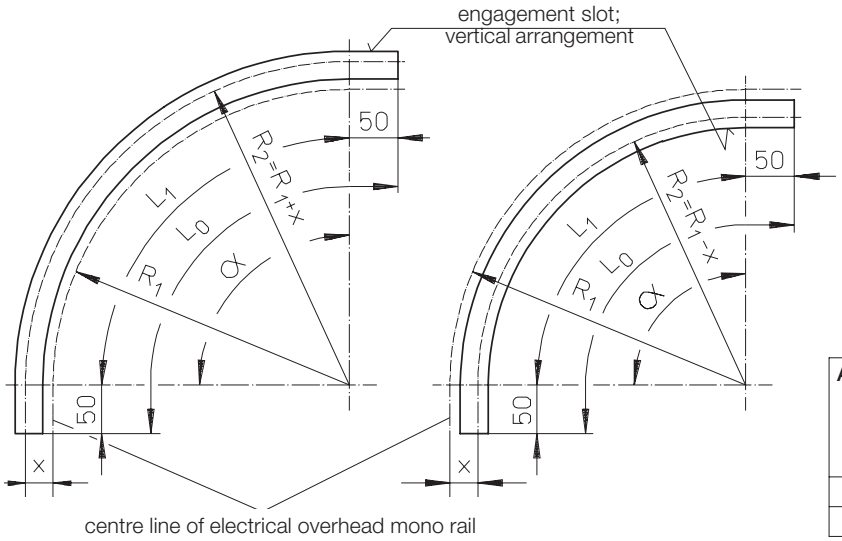

$L_0 = L_1 + 2 \cdot 50$

$L_1 = \frac{R_2 \cdot \pi \cdot \alpha}{180}$

R_1 = radius of mono rail
R_2 = radius of conductor rail

Max. speed: 80 m/min

Arrangement	min. bending radius at works Wampfler [mm]	min. bending radius on site [mm]	support spacing [mm]
vertical	450	450	250
horizontal	1000	1200	400

Order number code for standard curves

081516-2500x090x211

Insulated Conductor Rail Wampfler System Programme 815	081516
	11
	12
	13
	14
	15
copper rail 100 Amps	16
	17
	18

1	phase conductor (yellow)
2	earth conductor (yellow-green)
1	Standard insulation
2	
1	vertical arrangement inner curve
2	vertical arrangement outer curve
3	horizontal arrangement
	angle α
	radius R_2

Example: Insulated Conductor Rail, Programme 815; R_2 = 2500 mm; α = 90°; vertical arrangement (outer curve); standard insulation; phase conductor, copper rail 100 Amps
Order-Number 081516-2500x090x211

System arrangement

Programme 815

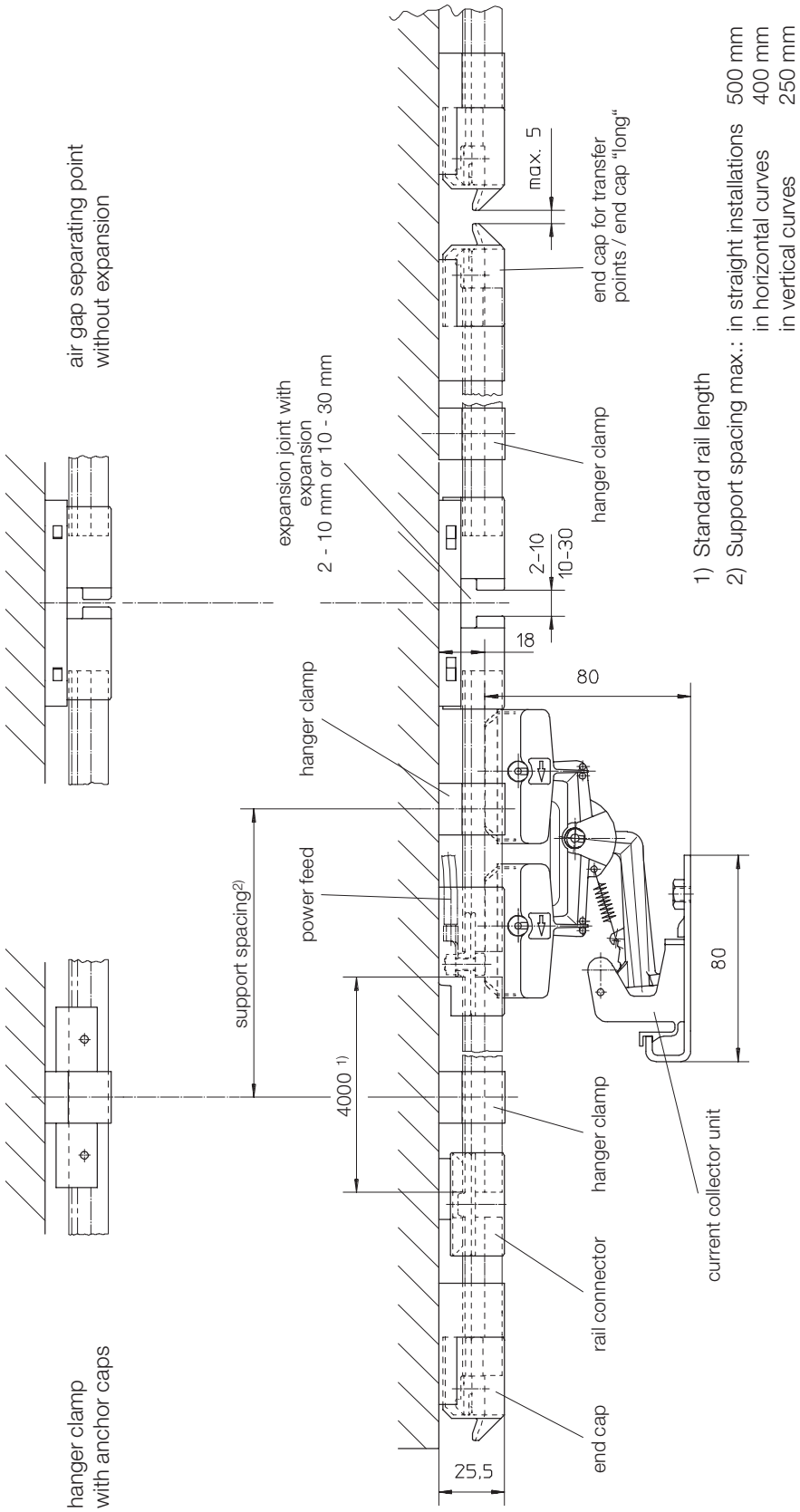

Shown is the horizontal arrangement

Questionnaire

Insulated conductor rail system

Please complete the questionnaire, so that we will be able to submit a quotation.
If you have any more questions please contact us.

Conductor rail system

- **Programme:** (selected) ❑ 811 ❑ 812 ❑ 813 ❑ 814 ❑ 815 ❑ 831 ❑ 842 ❑ 824
- **Type of conductor rail:** (nominal current, material, system)

  _____

  _____
- **Consumer:** (crane, lifting gear, shifting trolley, etc.)

  _____

  _____
- **Length of system:** _____ [m]
- **Arrangement/shape:** (enclose sketch if necessary)

  ❑ horizontal ❑ vertical ❑ straight ❑ curve
- **Location of installation:** ❑ Indoor ❑ Outdoor
- **Operating conditions:**

  ❑ humidity ❑ icing ❑ dust ❑ chemical influence

  ❑ others _____
- **Ambient temperature:** min. _____ [°C]; max. _____ [°C]
- **Max. travelling speed:** _____ [m/min]

Electrical data

- **Number of conductor rail poles:** _____ Phase conductor

  _____ Neutral conductor

  _____ Control

  _____ Earth

  _____ Data
- **Operating voltage:** _____ [V ~/=]
- **Operating frequency:** _____ [Hz]
- **Position and number of power feed:** (enclose sketch if necessary)

  _____

  _____

  _____
- **Position and number for air gaps:** _____
- **Length of connection cables of the current collector:** _____ [m]
- **Max. permissible voltage drop:** _____ [%] _____ [V]

Others

- **User/final customer:** _____

Power consumption and number of consumers

Motor data	Consumer 1			Consumer 2			Consumer 3		
	Power consumption [kW]	Duty cycle [%]	Current consumption [A]	Power consumption [kW]	Duty cycle [%]	Current consumption [A]	Power consumption [kW]	Duty cycle [%]	Current consumption [A]
Motor 1									
Motor 2									
Motor 3									
Others 1									
Others 2									

Please send quotation to the following address

Company: _____ Customer no.: _____

Dep./attention: _____

Address: _____

_____

Phone: _____ Telefax: _____

Wampfler AG • Rheinstrasse 27+33 • D-79576 Weil am Rhein-Maerkt
Customer Support: Phone +49 (0) 7621 / 66 22 22 • Fax +49 (0) 7621 6 62-144
E-Mail: info@wampfler.com • http://www.wampfler.com

System review

Single parts

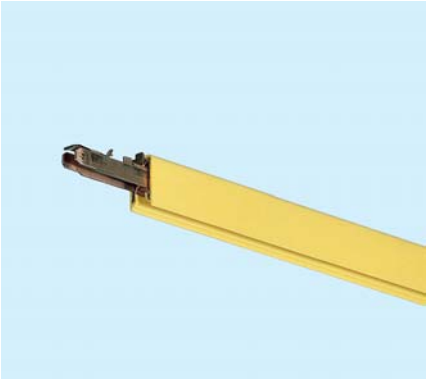

Rail connector plug-in type

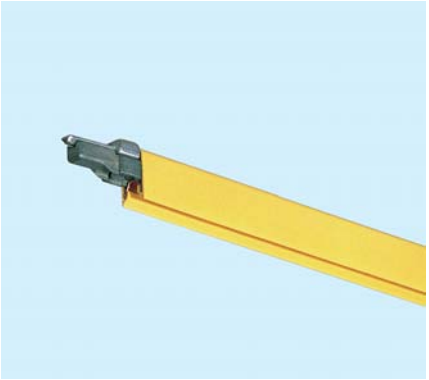

Rail connector screw type

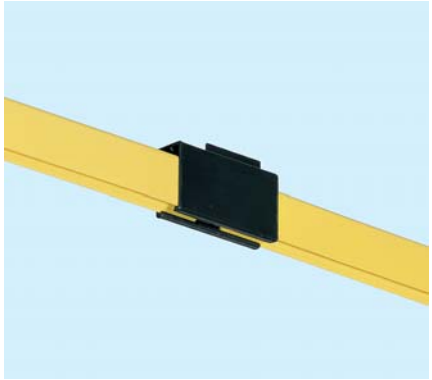

Rail connector with cover

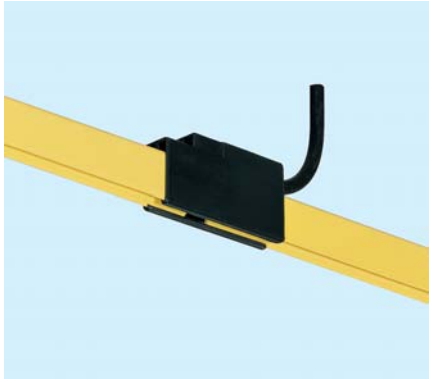

Power feed

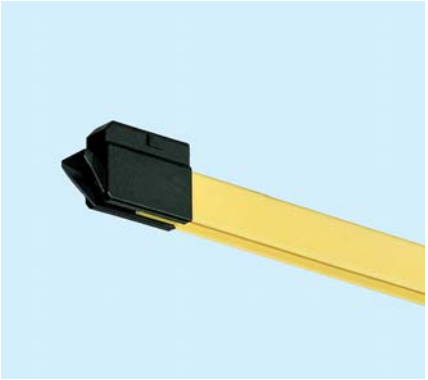

End cap for transfer points/End cap "long"

End cap for transfer points "short" with power feed

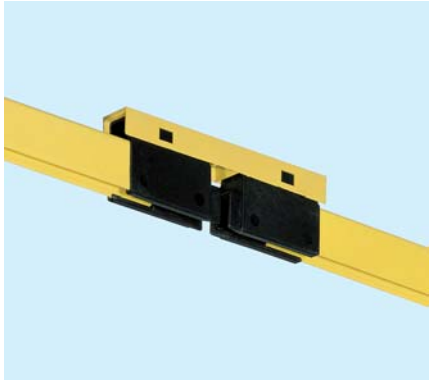

Air gap separating point

Air gap separating point with power feed (on both sides)

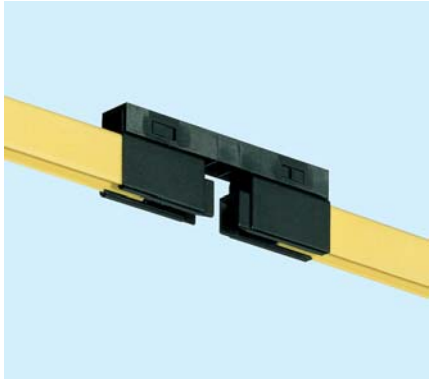

Expansion joint (8 mm expansion way) without bridge cables

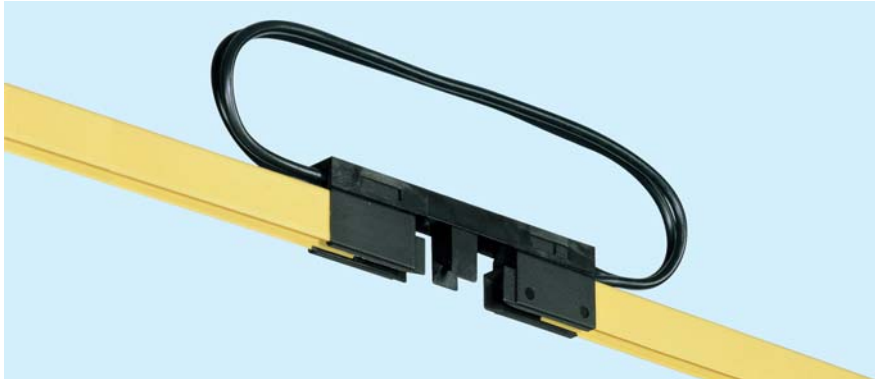

Expansion joint (20 mm expansion way) with bridge cables

System review

Single parts, units

Hanger clamp; 8-poles

Hanger clamp; 10-poles

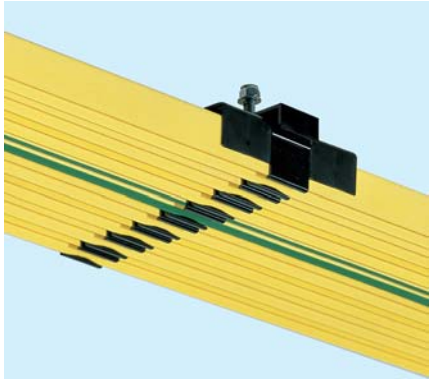

Conductor rail system with hanger clamp and anchor caps; 8-poles

Conductor rail system with end cap set and power feeds; 8-poles

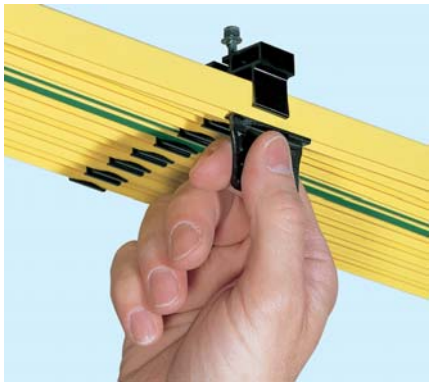

Disassembly tool for conductor rail pre-mounting on hanger clamps / end cap sets

Current collector; single pole

Double current collector; single pole

Collector shoes (visual difference of the insulation: see page 16)

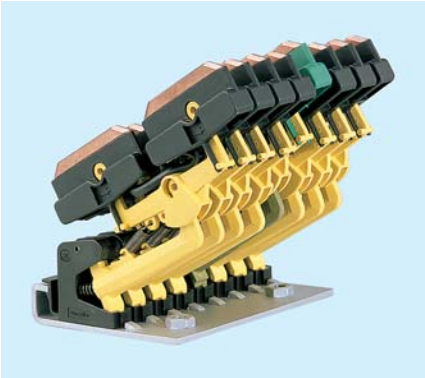

Double current collector unit with support plate; 8-poles

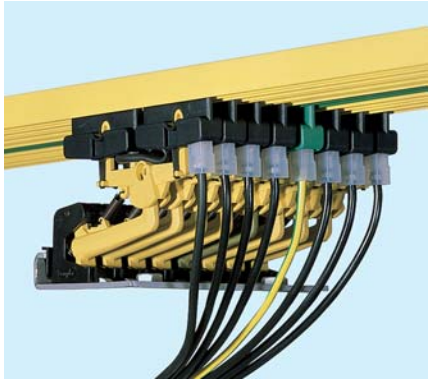

Double current collector unit with conductor rail system; 8-poles

Collector shoe control unit; 8-poles

Program Overview / General hints

Program overview

System Designs		Single Pole Insulated Conductor Rail				Multipole Conductor Rail	Enclosed Conductor Rail
Conductor Rail System		**Progr. 0811**	**Progr. 0815**	**Progr. 0812**	**Progr. 0813**	**Progr. 0831**	**Progr. 0842**
		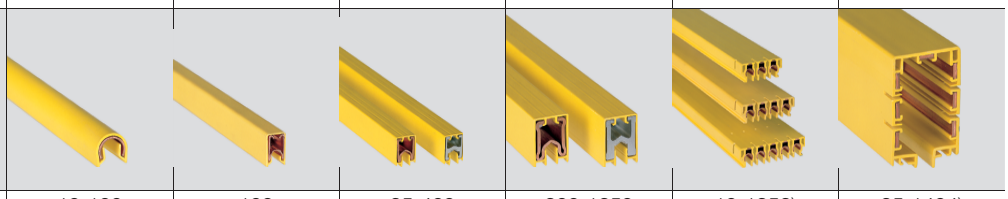					
Nominal Current1)	**[A]**	10-100	100	25-400	200-1250	10-1253)	35-1404)
Voltage Grade	**[V]**	500	500	660	660	500	600
Support Spacing	**[m]**	0.4-1.0	0.5	1.5	2.5	1	2
Rail Length2)	**[mm]**	4000	4000	4000	5000	4000	4000
Outside-Dimensions	**[mm]**	14.7 x 15.5	9.6 x 15.2	18 x 26	32 x 42	3-pol.: 26 x 62 4-pol.: 26 x 80 5-pol.: 26 x 98	5-pol.: 7-pol.: 56 x 90

1) At 100% duty cycle and 35ºC; 2) Standard; 3) 140 A at 80% duty cycle; 4) 160 A at 80% duty cycle

General Hints

We reserve the right to carry out any modification of the product at any time in the course of technical progress without prior notice.
All our equipment is in accordance with CE.
Our general terms of business are effective. We shall send them to you on request.
Reprint, even of extracts, is only permitted with our approval.

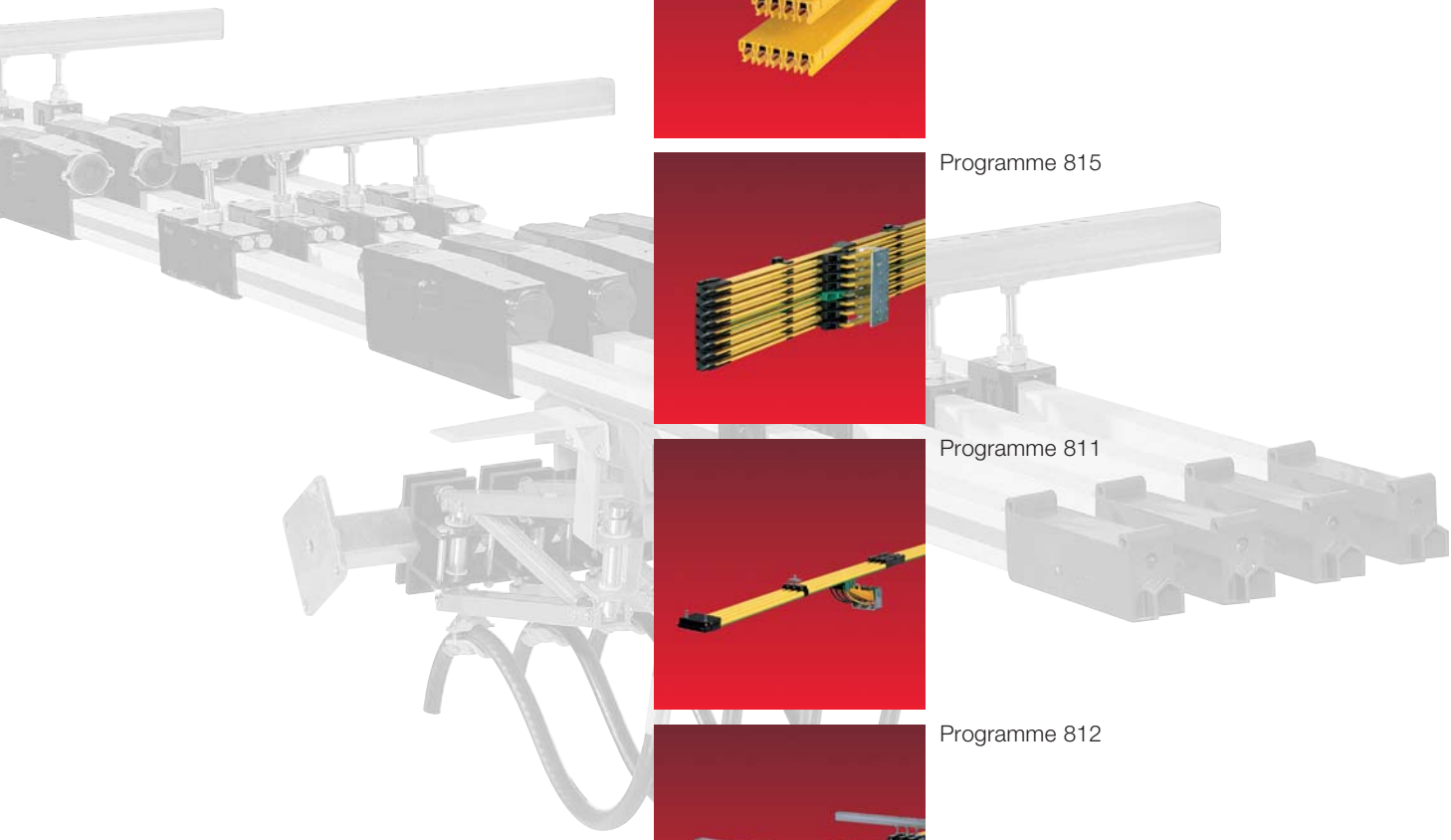

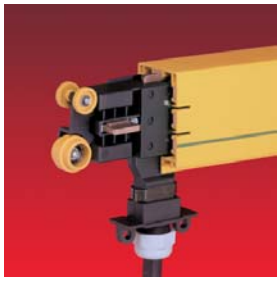

Programme 842

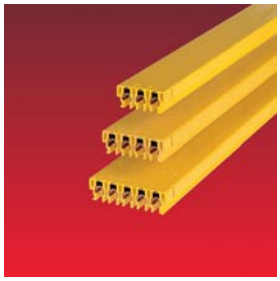

Programme 831

Programme 815

Programme 811

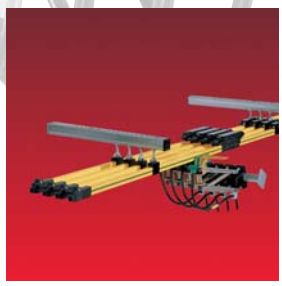

Programme 812

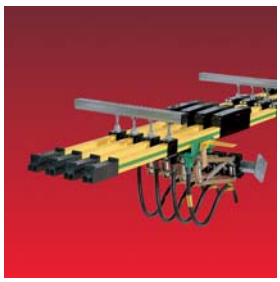

Programme 813

wampfler

solutions for a moving world

Wampfler AG • Rheinstrasse 27+33 • D-79576 Weil am Rhein
Customer Support: Phone +49 (0) 7621 / 66 22 22 • Fax +49 (0) 7621 6 62-144
E-Mail: info@wampfler.com • http://www.wampfler.com